TC14433/A

3-1/2 Digit, Analog-to-Digital Converter

Features:

- Accuracy: ±0.05% of Reading ±1 Count
- Two Voltage Ranges: 1.999V and 199.9 mV
- Up to 25 Conversions Per Second
- Z_{IN} > 1000M Ohms
- Single Positive Voltage Reference
- Auto-Polarity and Auto-Zero
- Overrange and Underrange Signals Available
- Operates in Auto-Ranging Circuits
- Uses On-Chip System Clock or External Clock
- Wide Supply Range: ±4.5V to ±8V

Applications:

- Portable Instruments
- Digital Voltmeters
- Digital Panel Meters
- Digital Scales
- Digital Thermometers
- Remote A/D Sensing Systems

Description

The TC14433 is a low-power, high-performance, monolithic CMOS 3-1/2 digit A/D converter. The TC14433 combines both analog and digital circuits on a single IC, thus minimizing the number of external components.

This dual slope A/D converter provides automatic polarity and zero correction with the addition of two external resistors and two capacitors. The full scale voltage range of this ratiometric IC extends from 199.9 millivolts to 1.999 volts. The TC14433 can operate over a wide range of power supply voltages, including batteries and standard 5-volt supplies.

The TC14433A features improved performance over the industry standard TC14433. Rollover, which is the measurement of identical positive and negative signals, is specified to have the same reading within one count for the TC14433A. Power consumption of the TC14433A is typically 4 mW, approximately one-half that of the industry standard TC14433.

The TC14433/A is available in 24-Pin PDIP, 24-Pin SOIC (TC14433 device only), and 28-Pin PLCC packages.

Package Type

24-Pin PDIP (Wide)
24-Pin SOIC (Wide)

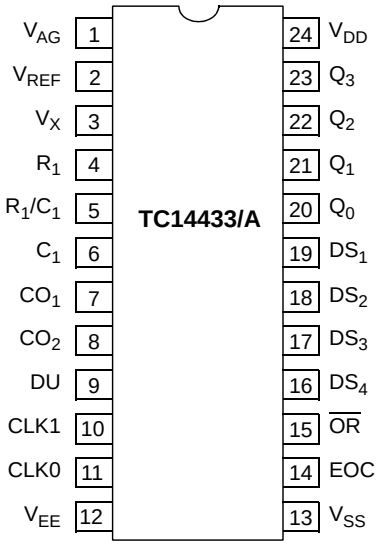

28-Pin PLCC

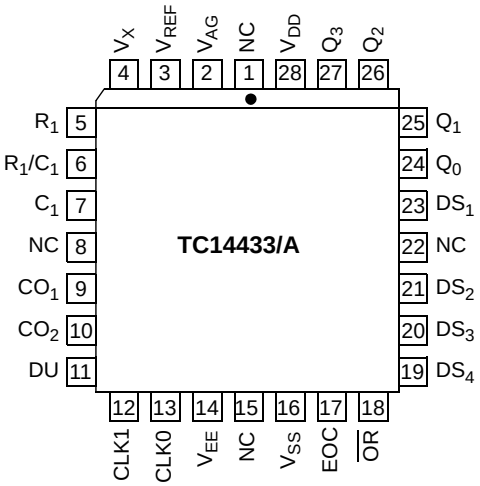

Note 1: NC = No internal connection (In 28-Pin PLCC).
2: 24-Pin SOIC (Wide) package, only for TC14433 device.

Typical Application

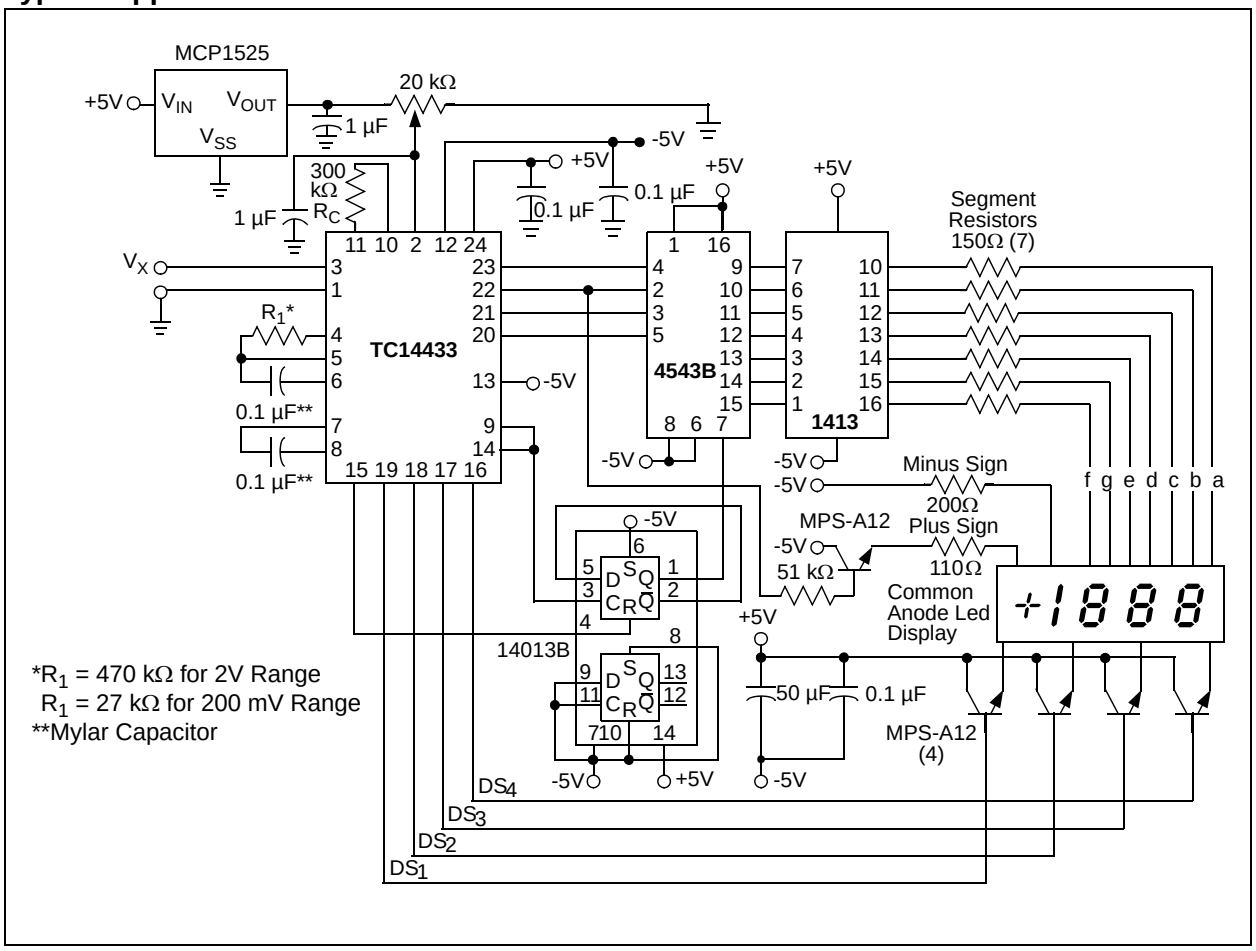

1.0 ELECTRICAL CHARACTERISTICS

Absolute Maximum Ratings†

Supply Voltage (V_{DD} – V_{EE}) ..... -0.5V to +18V
Voltage on Any Pin:
Reference to V_{EE} .....-0.5V to (V_{DD} + 0.5)
DC Current, Any Pin: .....±10 mA
Power Dissipation ($T_A \leq 70°C$):
Plastic PLCC 1.0W
Plastic PDIP.....940 mW
SOIC.....940 mW
Operating Temperature Range .....-40°C to +85°C
Storage Temperature Range.....-65°C to +160°C

† **Notice:** Stresses above those listed under "Absolute Maximum Ratings" may cause permanent damage to the device. These are stress ratings only and functional operation of the device at these or any other conditions above those indicated in the operation sections of the specifications is not implied. Exposure to Absolute Maximum Rating conditions for extended periods may affect device reliability.

TC14433/A ELECTRICAL SPECIFICATIONS

Electrical Characteristics: Unless otherwise specified, V_{DD} = +5V, V_{EE} = -5V, C_1 = 0.1 µF, (Mylar), C_0 = 0.1 µF, R_C = 300 kΩ, R_1 = 470 kΩ @ V_{REF} = 2V, R_1 = 27 kΩ @ V_{REF} = 200 mV, T_A = +25°C.

Parameter	Symbol	Min	Typ	Max	Min	Typ	Max	Units	Test Conditions
Analog Input									
Rollover Error (Positive) and Negative Full Scale Symmetry	SYE	-1	—	+1	—	—	—	Counts	200 mV Full Scale V_{IN} -V_{IN} = +V_{IN}
Linearity Output Reading **(Note 1)**	NL	-0.05	+0.05	+0.05	—	—	—	%rdg	V_{REF} = 2V
		-1 count	—	+1 count	—	—	—	%rdg	V_{REF} = 200 mV
Stability Output Reading **(Note 2)**	SOR	—	—	2	—	—	—	LSD	V_X = 1.99V, V_{REF} = 2V
		—	—	3	—	—	—	LSD	V_X = 199 mV, V_{REF} = 200 mV
Zero Output Reading	ZOR	—	0	0	—	—	—	LSD	V_X = 0V, V_{REF} = 2V
Bias Current: Analog Input	I_{IN}	—	±20	±100	—	—	—	pA	
Reference Input		—	±20	±100	—	—	—	pA	
Analog Ground		—	±20	±100	—	—	—	pA	
Common mode Rejection	CMRR	—	65	—	—	—	—	dB	V_X = 1.4V, V_{REF} = 2V, F_{OC} = 32 kHz

Note 1: Accuracy – The accuracy of the meter at full scale is the accuracy of the setting of the reference voltage. Zero is recalculated during each conversion cycle. The meaningful specification is linearity. In other words, the deviation from correct reading for all inputs other than positive full scale and zero is defined as the linearity specification.

2: The LSD stability for 200 mV scale is defined as the range that the LSD will occupy 95% of the time.

3: Pin numbers refer to 24-pin PDIP.

TC14433/A ELECTRICAL SPECIFICATIONS (CONTINUED)

Electrical Characteristics: Unless otherwise specified, V_{DD} = +5V, V_{EE} = -5V, C_1 = 0.1 µF, (Mylar), C_0 = 0.1 µF, R_C = 300 kΩ, R_1 = 470 kΩ @ V_{REF} = 2V, R_1 = 27 kΩ @ V_{REF} = 200 mV, T_A = +25°C.

Parameter	Symbol	Min	Typ	Max	Min	Typ	Max	Units	Test Conditions
Digital									
Output Voltage (Pins 14 to 23) **(Note 3)**	V_{OL}	—	0	0.05	—	—	0.05	V	V_{SS} = 0V, "0" Level
		—	-5	-4.95	—	—	-4.95	V	V_{SS} = -5V, "0" Level
Output Voltage (Pins 14 to 23) **(Note 3)**	V_{OH}	4.95	5	—	4.95	—	—	V	V_{SS} = 0V, "1" Level
		4.95	5	—	4.95	—	—	V	V_{SS} = -5V, "1" Level
Output Current (Pins 14 to 23)	I_{OH}	-0.2	-0.36	—	-0.14	—	—	mA	V_{SS} = 0V, V_{OH} = 4.6V Source
		- 0.5	-0.9	—	-0.35	—	—	mA	V_{SS} = -5V, V_{OH} = 5V Source
Output Current (Pins 14 to 23)	I_{OL}	0.51	0.88	—	0.36	—	—	mA	V_{SS} = 0V, V_{OL} = 0.4V Sink
		1.3	2.25	—	0.9	—	—	mA	V_{SS} = -5V, V_{OL} = -4.5V Sink
Clock Frequency	f_{CLK}	—	66	—	—	—	—	kHz	R_C = 300 kΩ
Input Current -DU	I_{DU}	—	±0.00 001	±0.3	—	—	±1	µA	
Power									
Quiescent Current: TC14433A:	I_Q	—	—	—	—	—	—	—	V_{DD} to V_{EE}, I_{SS} = 0
		—	0.4	2	—	—	3.7	mA	V_{DD} = 5, V_{EE} = -5
		—	1.4	4	—	—	7.4	mA	V_{DD} = 8, V_{EE} = -8
Quiescent Current: TC14433		—	—	—	—	—	—	—	V_{DD} to V_{EE}, I_{SS} = 0
		—	0.9	2	—	—	3.7	mA	V_{DD} = 5, V_{EE} = -5
		—	1.8	4	—	—	7.4	mA	V_{DD} = 8, V_{EE} = -8
Supply Rejection	PSRR	—	0.5	—	—	—	—	mV/V	V_{DD} to V_{EE}, I_{SS} = 0, V_{REF} = 2V, V_{DD} = 5, V_{EE} = -5

Note 1: Accuracy – The accuracy of the meter at full scale is the accuracy of the setting of the reference voltage. Zero is recalculated during each conversion cycle. The meaningful specification is linearity. In other words, the deviation from correct reading for all inputs other than positive full scale and zero is defined as the linearity specification.

2: The LSD stability for 200 mV scale is defined as the range that the LSD will occupy 95% of the time.

3: Pin numbers refer to 24-pin PDIP.

TEMPERATURE SPECIFICATIONS

Electrical Characteristics: Unless otherwise indicated, V_{DD} = +5V and V_{EE} = -5V.

Parameters	Sym	Min	Typ	Max	Units	Conditions
Temperature Ranges						
Operating Temperature Range	T_A	-40	—	+85	°C	**Note**
Storage Temperature Range	T_A	-65	—	+150	°C	
Thermal Package Resistances						
Thermal Resistance, 24LD PDIP	θ_{JA}	—	60.5	—	°C/W	
Thermal Resistance, 24LD CERDIP	θ_{JA}	—	N/A	—	°C/W	
Thermal Resistance,24LD SOIC Wide	θ_{JA}	—	70	—	°C/W	
Thermal Resistance, 28LD PLCC	θ_{JA}	—	61.2	—	°C/W	

Note: The internal junction temperature (T_J) must not exceed the absolute maximum specification of +150°C.

2.0 TYPICAL PERFORMANCE CURVES

Note:	The graphs and tables provided following this note are a statistical summary based on a limited number of samples and are provided for informational purposes only. The performance characteristics listed herein are not tested or guaranteed. In some graphs or tables, the data presented may be outside the specified operating range (e.g., outside specified power supply range) and therefore outside the warranted range.

Note: Unless otherwise specified, V_{DD} = +5V, V_{EE} = -5V, C_1 = 0.1 µF, (Mylar), C_0 = 0.1 µF, R_C = 300 kΩ, R_1 = 470 kΩ @ V_{REF} = 2V, R_1 = 27 kΩ @ V_{REF} = 200 mV, T_A = +25°C.

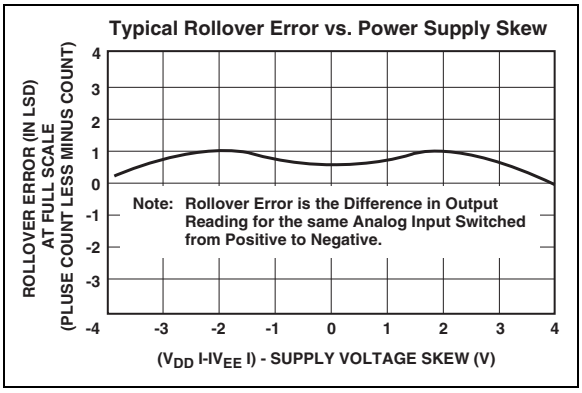

FIGURE 2-1: *Rollover Error vs. Power Supply Skew*

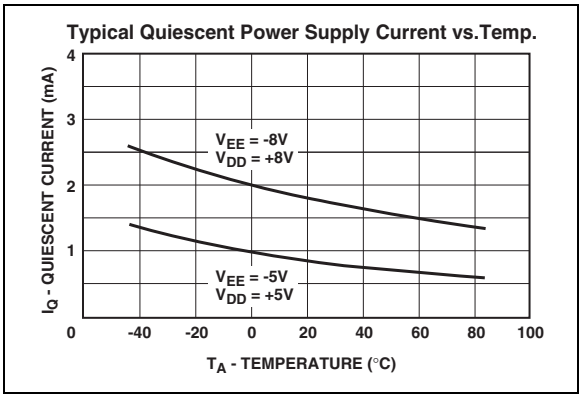

FIGURE 2-4: *Quiescent Power Supply Current vs. Ambient Temperature.*

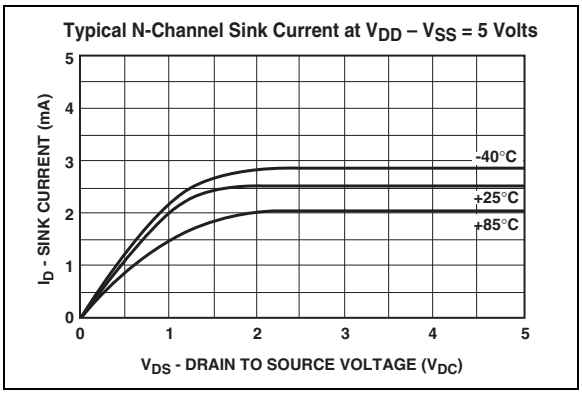

FIGURE 2-2: *Sink Current at V_{DD} = 5V.*

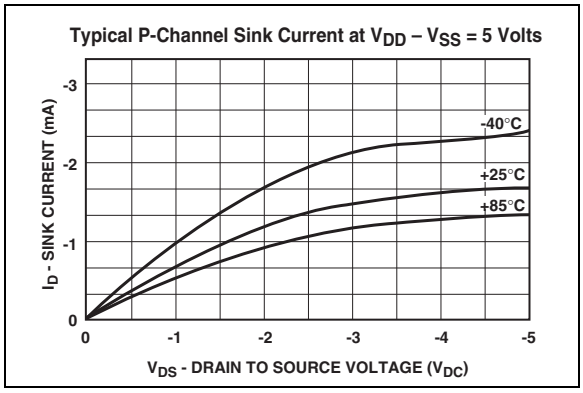

FIGURE 2-5: *Sink Current at VDD = 5V.*

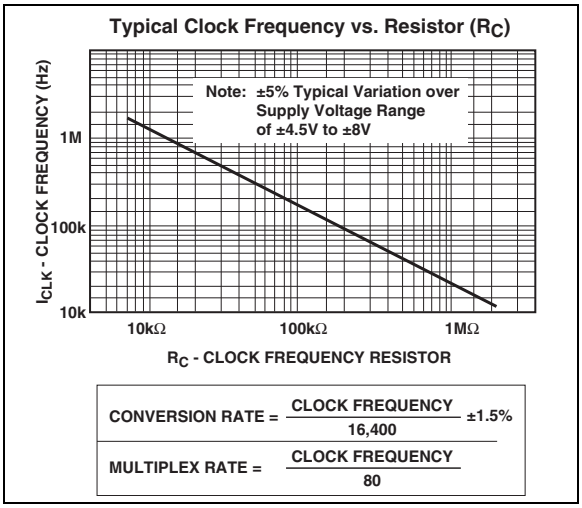

FIGURE 2-3: *Clock Frequency vs. Resistor (R_C)*

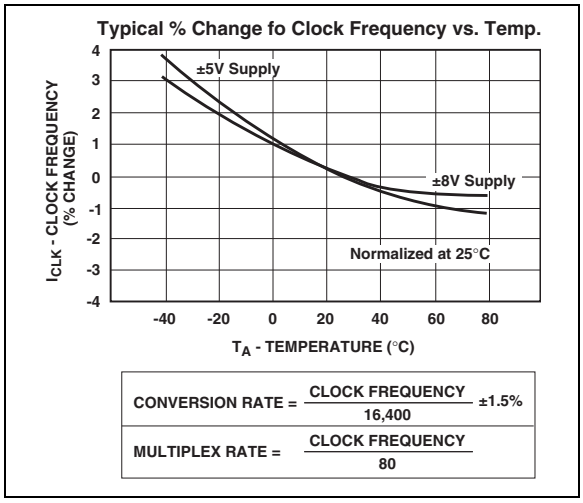

FIGURE 2-6: *% Change to Clock Frequency vs. Ambient Temperature.*

3.0 PIN DESCRIPTIONS

The descriptions of the pins are listed in Table 3-1.

TABLE 3-1: PIN FUNCTION TABLE

Pin No. 24-Pin PDIP, SOIC	Pin No. 28-Pin PLCC	Symbol	Description
1	2	V_{AG}	This is the analog ground. It has a high input impedance. The pin determines the reference level for the unknown input voltage (V_X) and the reference voltage (V_{REF}).
2	3	V_{REF}	Reference voltage – Full scale output is equal to the voltage applied to V_{REF}. Therefore, full scale voltage of 1.999V requires 2V reference and 199.9 mV full scale requires a 200 mV reference. V_{REF} functions as system reset also. When switched to V_{EE}, the system is reset to the beginning of the conversion cycle.
3	4	V_X	The unknown input voltage (V_X) is measured as a ratio of the reference voltage (V_{REF}) in a ratiometric A/D conversion.
4	5	R_1	This pin is for external components used for the integration function in the dual slope conversion. Typical values are 0.1 µF (Mylar) capacitor for C_1.
5	6	R_1/C_1	R_1 = 470 kΩ (resistor) for 2V full scale.
6	7	C_1	R_1 = 27 kΩ (resistor) for 200 mV full scale. Clock frequency of 66 kHz gives 250 ms conversion time.
7	9	CO_1	These pins are used for connecting the offset correction capacitor. The recommended value is 0.1 µF.
8	10	CO_2	These pins are used for connecting the offset correction capacitor. The recommended value is 0.1 µF.
9	11	DU	Display update input pin. When DU is connected to the EOC output, every conversion is displayed. New data will be strobed into the output latches during the conversion cycle if a positive edge is received on DU, prior to the ramp down cycle. When this pin is driven from an external source, the voltage should be referenced to V_{SS}.
10	12	CLK_1	Clock input pins. The TC14433 has its own oscillator system clock. Connecting a single resistor between CLK_1 and CLK_0 sets the clock frequency.
11	13	CLK_0	A crystal or OC circuit may be inserted in lieu of a resistor for improved CLK_1, the clock input, can be driven from an external clock source, which need only have standard CMOS output drive. This pin is referenced to V_{EE} for external clock inputs. A 300 kΩ resistor yields a clock frequency of about 66 kHz. See **Section 2.0 "Typical Performance Curves"**. (Also see Figure 5-3 for alternate circuits.)
12	14	V_{EE}	Negative power current. Connection pin for the most negative supply. Please note the current for the output drive circuit is returned through V_{SS}. Typical supply current is 0.8 mA.
13	16	V_{SS}	Negative power supply for output circuitry. This pin sets the low voltage level for the output pins (BCD, Digit Selects, EOC, OR). When connected to analog ground, the output voltage is from analog ground to V_{DD}. If connected to V_{EE}, the output swing is from V_{EE} to V_{DD}. The recommended operating range for V_{SS} is between the V_{DD} -3 volts and V_{EE}.
14	17	EOC	End of conversion output generates a pulse at the end of each conversion cycle. This generated pulse width is equal to one half the period of the system clock.
15	18	OR	Overrange pin. Normally this pin is set high. When V_X exceeds V_{REF} the OR is low.

TABLE 3-1: PIN FUNCTION TABLE (CONTINUED)

Pin No. 24-Pin PDIP, SOIC	Pin No. 28-Pin PLCC	Symbol	Description
16	19	DS_4	Digit select pin. The digit select output goes high when the respective digit is selected. The MSD (1/2 digit turns on immediately after an EOC pulse).
17	20	DS_3	The remaining digits turn on in sequence from MSD to LSD.
18	21	DS_2	To ensure that the BCD data has settled, an inter digit blanking time of two clock periods is included.
19	23	DS_1	Clock frequency divided by 80 equals multiplex rate. For example, a system clock of 60 kHz gives a multiplex rate of 0.8 kHz.
20	24	Q_0	See Figure 5-4 for digit select timing diagram.
21	25	Q_1	BCD data output pin. Multiplexed BCD outputs contain three full digits of information during digit select DS_2, DS_3, DS_4.
22	26	Q_2	During DS_1, the 1/2 digit, overrange, underrange and polarity information is available.
23	27	Q_3	Refer to the Truth Table 5-1.
24	28	V_{DD}	Positive power supply. This is the most positive power supply pin.
—	1	NC	Not Used.
—	8	NC	Not Used.
—	15	NC	Not Used.
—	22	NC	Not Used.

4.0 DETAILED DESCRIPTION

The TC14433 CMOS IC becomes a modified dual-slope A/D with a minimum of external components. This IC has the customary CMOS digital logic circuitry, as well as CMOS analog circuitry. It provides the user with digital functions such as (counters, latches, multiplexers), and analog functions such as (operational amplifiers and comparators) on a single chip. Refer to the Functional Block diagram, Figure 4-3.

Features of the TC14433/A include auto-zero, high input impedances and auto-polarity. Low power consumption and a wide range of power supply voltages are also advantages of this CMOS device. The system's auto-zero function compensates for the offset voltage of the internal amplifiers and comparators. In this "ratiometric system," the output reading is the ratio of the unknown voltage to the reference voltage, where a ratio of 1 is equal to the maximum count of 1999. It takes approximately 16,000 clock periods to complete one conversion cycle. Each conversion cycle may be divided into 6 segments. Figure 4-1 shows the conversion cycle in 6 segments for both positive and negative inputs.

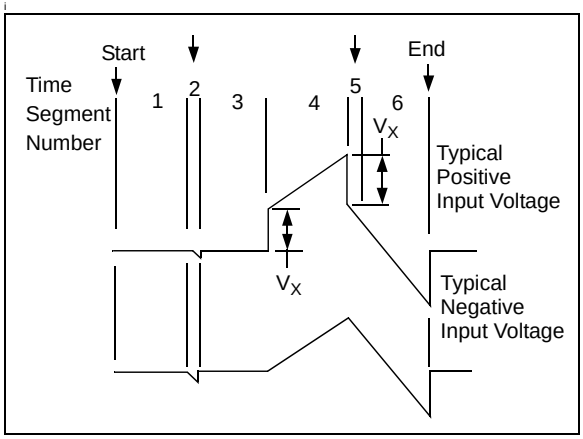

FIGURE 4-1: *Integrator Waveforms at Pin 6.*

Segment 1 – The offset capacitor (C_O), which compensates for the input offset voltages of the buffer and integrator amplifiers, is charged during this period. However, the integrator capacitor is shorted. This segment requires 4000 clock periods.

Segment 2 – During this segment, the integrator output decreases to the comparator threshold voltage. At this time, a number of counts equivalent to the input offset voltage of the comparator is stored in the offset latches for later use in the auto-zero process. The time for this segment is variable and less than 800 clock periods.

Segment 3 – This segment of the conversion cycle is the same as Segment 1.

Segment 4 – Segment 4 is an up going ramp cycle with the unknown input voltage (V_X as the input to the integrator. Figure 4-2 shows the equivalent configuration of the analog section of the TC14433. The actual configuration of the analog section is dependent upon the polarity of the input voltage during the previous conversion cycle.

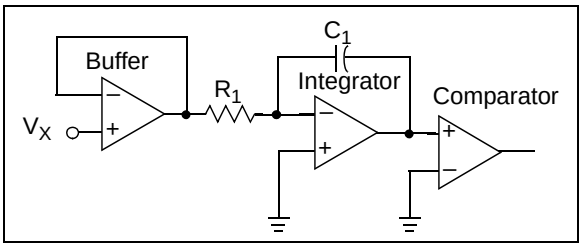

FIGURE 4-2: *Equivalent Circuit Diagrams of the Analog Section During Segment 4 of the Timing Cycle*

Segment 5 – This segment is a down-going ramp period with the reference voltage as the input to the integrator. Segment 5 of the conversion cycle has a time equal to the number of counts stored in the offset storage latches during Segment 2. As a result, the system zeros automatically.

Segment 6 – This is an extension of Segment 5. The time period for this portion is 4000 clock periods. The results of the A/D conversion cycle are determined in this portion of the conversion cycle.

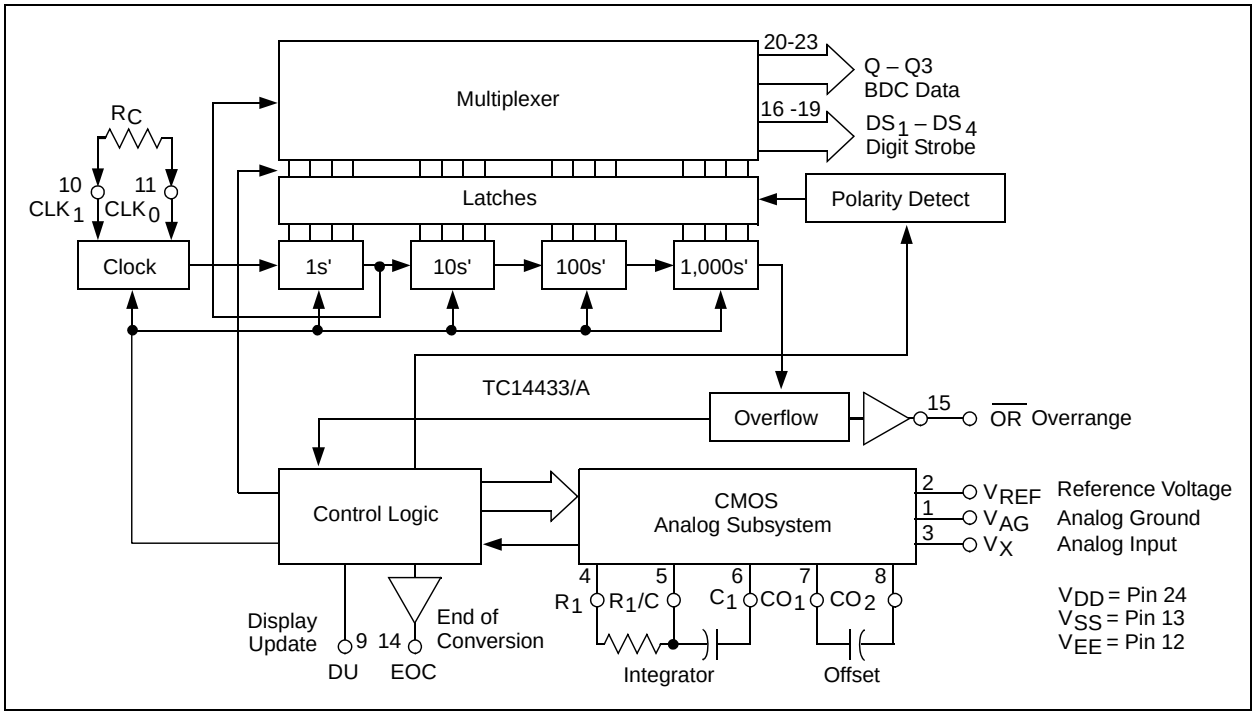

FIGURE 4-3: *Functional Block Diagram.*

5.0 TYPICAL APPLICATIONS

The typical application circuit is an example of a 3-1/2 digit voltmeter using the TC14433 with Common-anode displays. This system requires a 2.5V reference. Full scale may be adjusted to 1.999V or 199.9 mV. Input overrange is indicated by flashing a display. This display uses LEDs with common anode digit lines. Power supply for this system is shown as a dual ±5V supply; however, the TC14433 will operate over a wide voltage range

The circuit in Figure 5-1 shows a 3-1/2 digit LCD voltmeter. The 14024B provides the low frequency square wave signal drive to the LCD backplane. Dual power supplies are shown here; however, one supply may be used when V_{SS} is connected to V_{EE}. In this case, V_{AG} must be at least 2.8V above V_{EE}.

When only segments b and c of the decoder are connected to the 1/2 digit of the display, 4, 0, 7 and 3 appear as 1.

The overrange indication (Q_3 = 0 and Q_0 = 1) occurs when the count is greater than 1999; (e.g., 1.999V for a reference of 2V) The underrange indication, useful for auto-ranging circuits, occurs when the count is less than 180; (e.g., 0.180V for a reference of 2V).

Note:	If the most significant digit is connected to a display other than a "1" only, such as a full digit display, segments other than b and c must be disconnected. The BCD to 7-segment decoder must blank on BCD inputs 1010 to 1111 (see Table 5-1).

TABLE 5-1: TRUTH TABLE

Coded Condition of MSD	Q_3	Q_2	Q_1	Q_0	BDC to 7-Segment Decoding	
+0	1	1	1	0	Blank	
-0	1	0	1	0	Blank	
+0 UR	1	1	1	1	Blank	
-0 UR	1	0	1	1	Blank	
+1	0	1	0	0	4 – 1	Hook up only segments b and c to MSD
-1	0	0	0	0	0 – 1	
+1 OR	0	1	1	1	7 – 1	
-1 OR	0	0	1	1	3 – 1	

Note 1: Q_3 – 1/2 digit, low for "1", high for "0".
Q_2 – Polarity: "1" = positive, "0" = negative.
Q_0 – Out of range condition exists if Q_0 = 1. When used in conjunction with Q_3, the type of out of range condition is indicated; i.e., $Q_3 = 0 \rightarrow$ OR or $Q_3 = 1 \rightarrow$ UR.

Figure 5-2 is an example of a 3-1/2 digit LED voltmeter with a minimum of external components, (only 11 additional components). In this circuit, the 14511B provides the segment drive and the 75492 or 1413 provides sink for digit current. Display is blanked during the overrange condition.

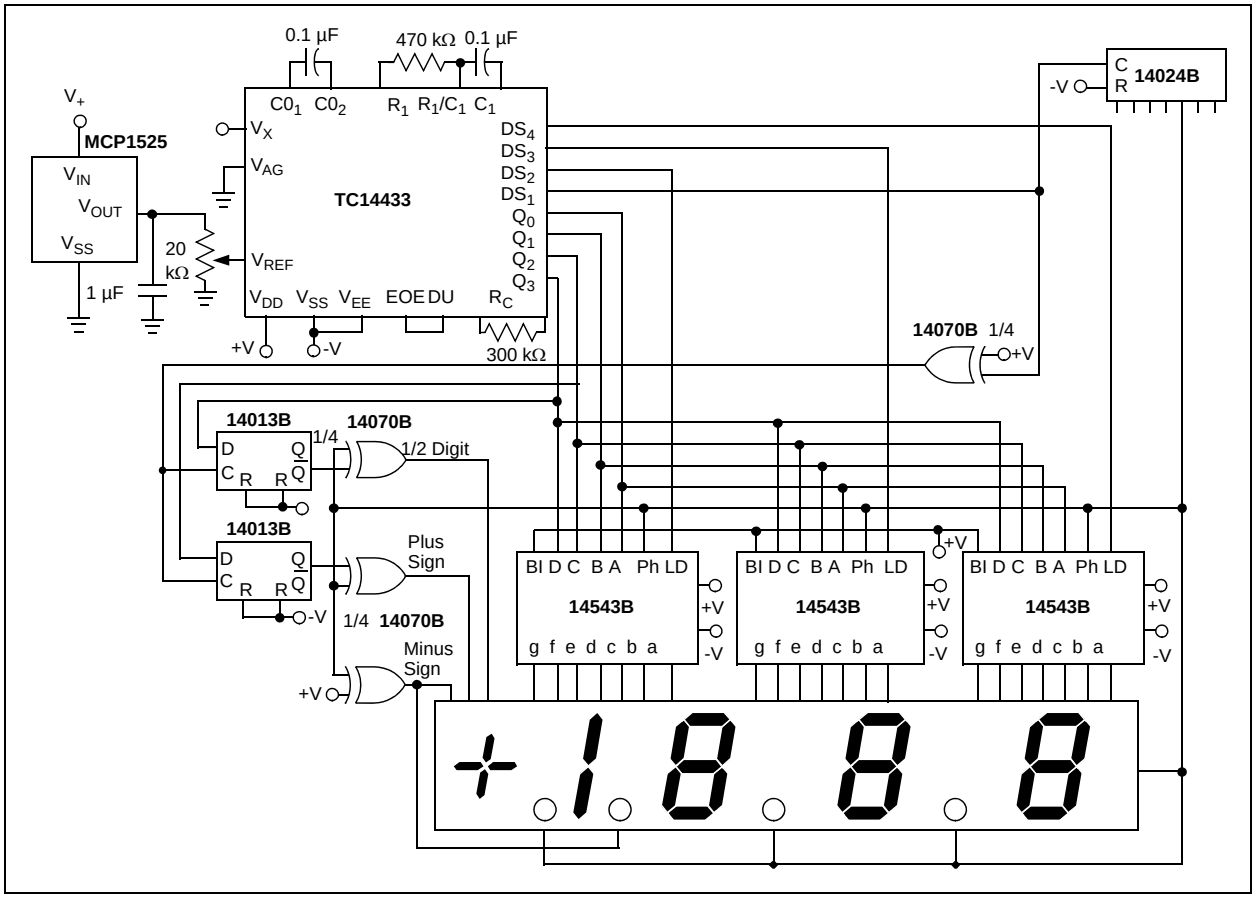

FIGURE 5-1: *3-1/2 Digit Voltmeter with LCD Display.*

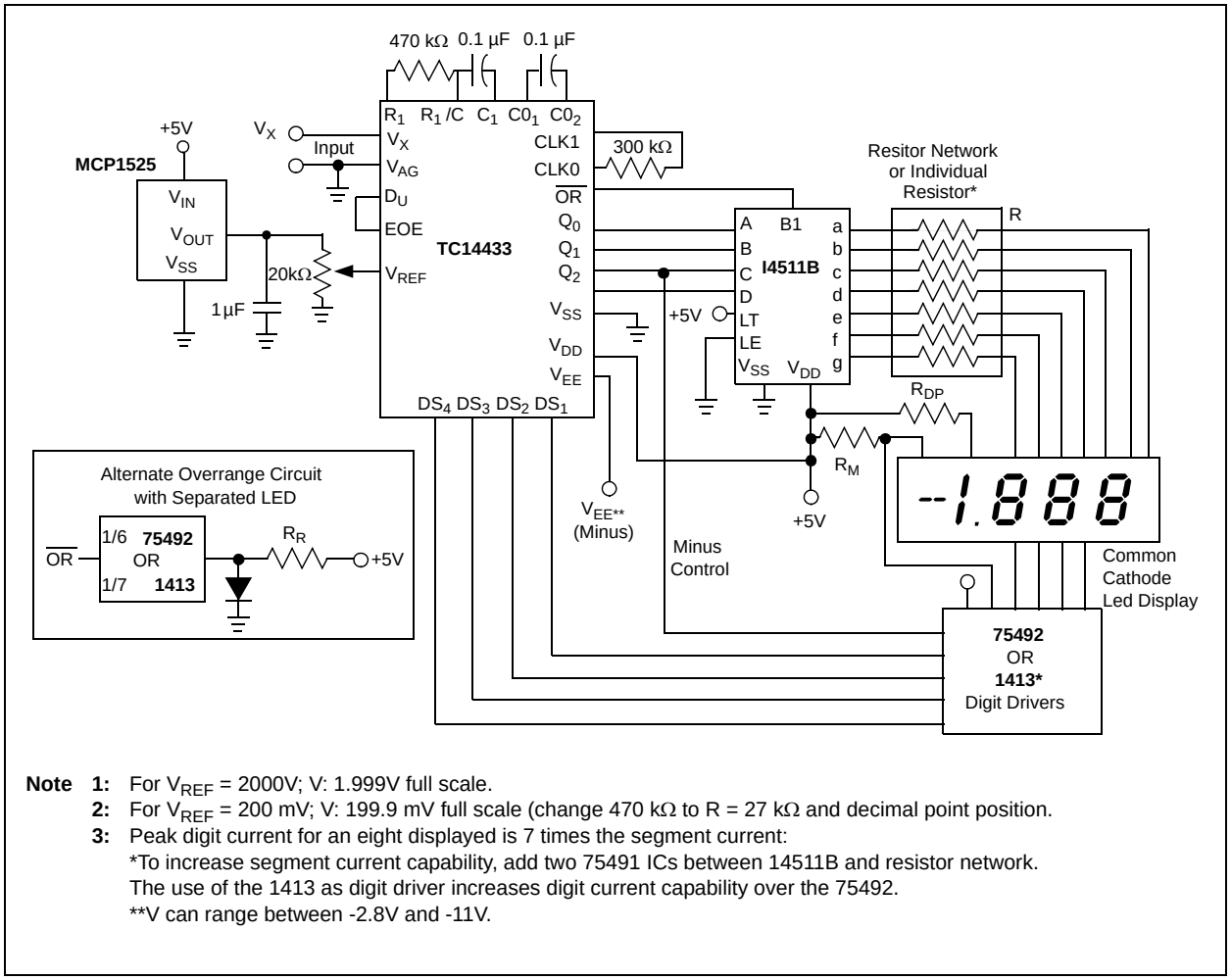

Note 1: For V_{REF} = 2000V; V: 1.999V full scale.
2: For V_{REF} = 200 mV; V: 199.9 mV full scale (change 470 kΩ to R = 27 kΩ and decimal point position.
3: Peak digit current for an eight displayed is 7 times the segment current:
*To increase segment current capability, add two 75491 ICs between 14511B and resistor network.
The use of the 1413 as digit driver increases digit current capability over the 75492.
**V can range between -2.8V and -11V.

FIGURE 5-2: *3-1/2 Digit LED Voltmeter with Low Component Count Using Common Cathode Display.*

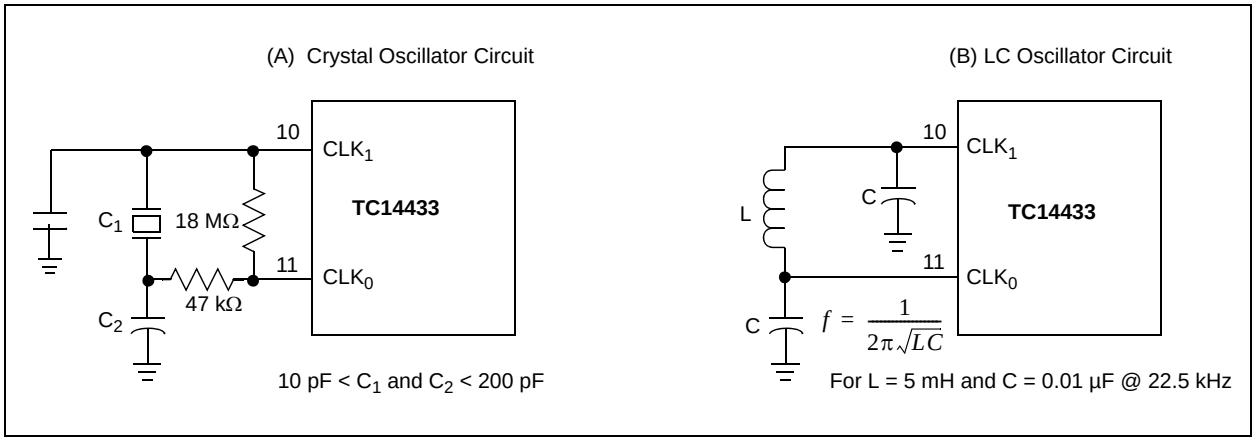

FIGURE 5-3: *Alternate Oscillator Circuits.*

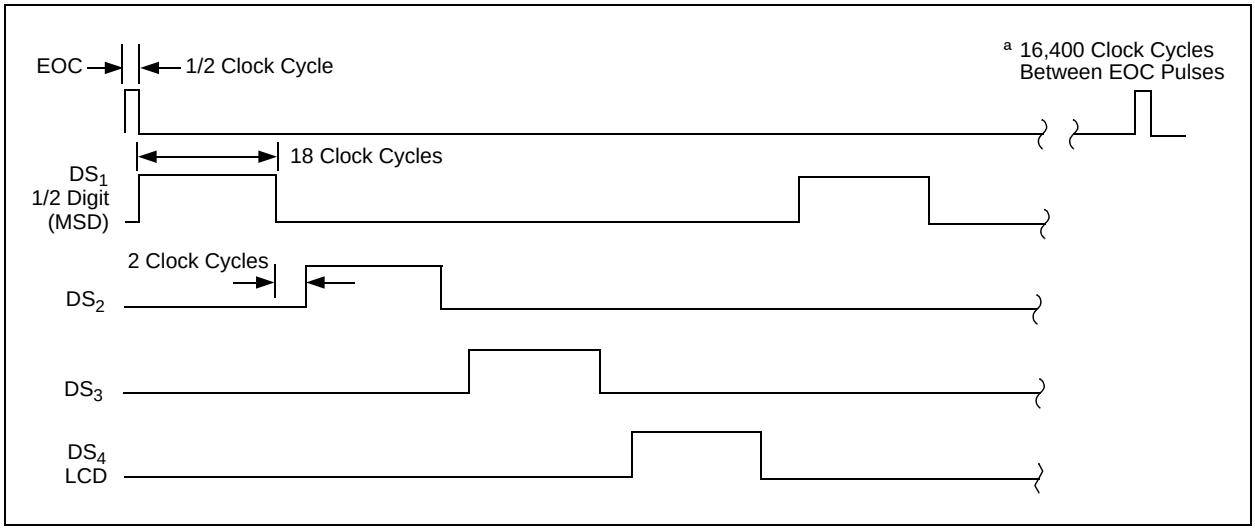

FIGURE 5-4: *Digit Select Timing Diagram.*

6.0 PACKAGING INFORMATION

6.1 Package Marking Information

24-Lead PDIP

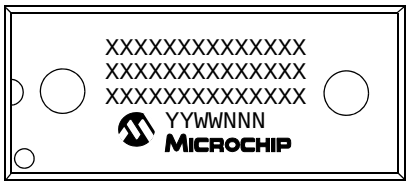

Example:

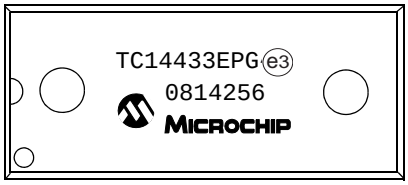

24-Lead SOIC (.300”)

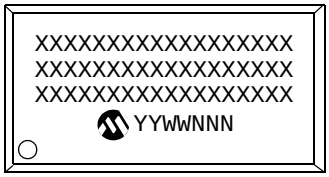

Example:

28-Lead PLCC

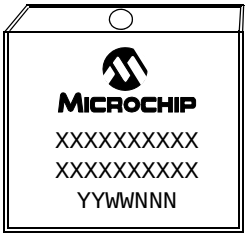

Example:

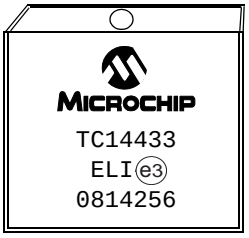

Legend:	XX...X	Customer-specific information
	Y	Year code (last digit of calendar year)
	YY	Year code (last 2 digits of calendar year)
	WW	Week code (week of January 1 is week ‘01’)
	NNN	Alphanumeric traceability code
	e3	Pb-free JEDEC designator for Matte Tin (Sn)
	*	This package is Pb-free. The Pb-free JEDEC designator (e3) can be found on the outer packaging for this package.
Note:	In the event the full Microchip part number cannot be marked on one line, it will be carried over to the next line, thus limiting the number of available characters for customer-specific information.	

24-Lead Plastic Dual In-Line (PG) – 600 mil Body [PDIP]

Note: For the most current package drawings, please see the Microchip Packaging Specification located at http://www.microchip.com/packaging

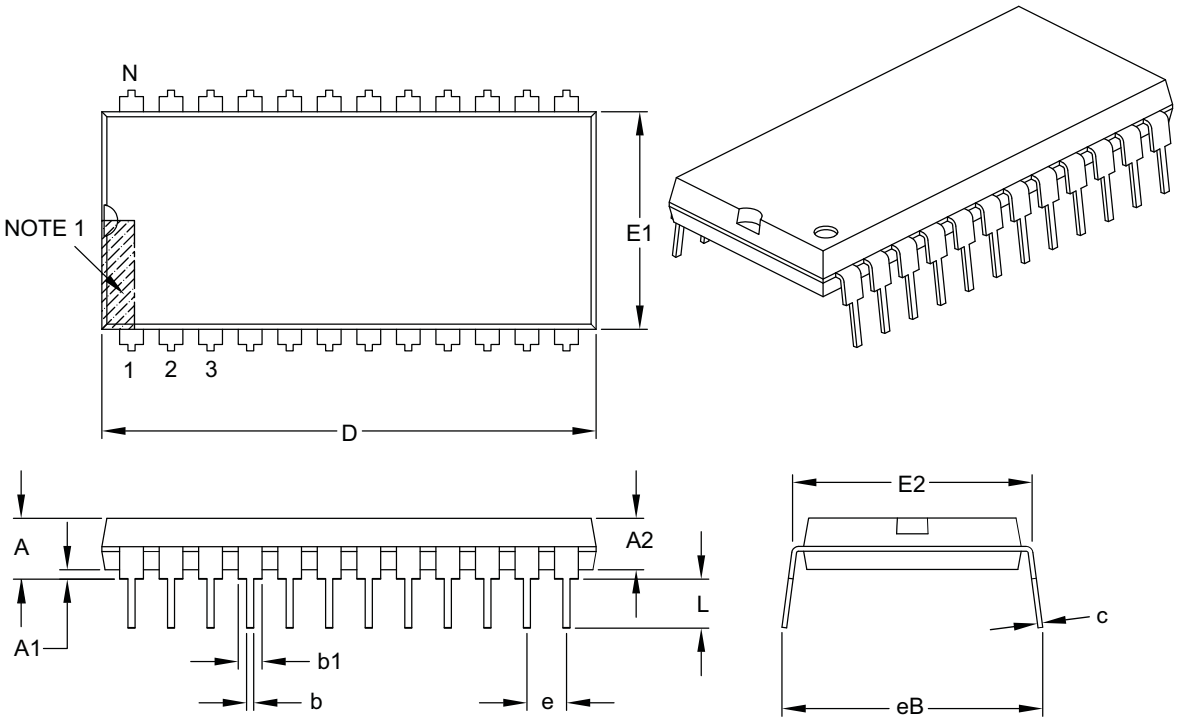

Units		INCHES		
Dimension Limits		MIN	NOM	MAX
Number of Pins	N	24		
Pitch	e	.100 BSC		
Top to Seating Plane	A	–	–	.250
Molded Package Thickness	A2	.125	–	.195
Base to Seating Plane	A1	.015	–	–
Shoulder to Shoulder Width	E	.590	–	.625
Molded Package Width	E1	.485	–	.580
Overall Length	D	1.150	–	1.290
Tip to Seating Plane	L	.115	–	.200
Lead Thickness	c	.008	–	.015
Upper Lead Width	b1	.030	–	.070
Lower Lead Width	b	.014	–	.022
Overall Row Spacing §	eB	–	–	.700

Notes:

1. Pin 1 visual index feature may vary, but must be located within the hatched area.
2. § Significant Characteristic.
3. Dimensions D and E1 do not include mold flash or protrusions. Mold flash or protrusions shall not exceed .010" per side.
4. Dimensioning and tolerancing per ASME Y14.5M.

   BSC: Basic Dimension. Theoretically exact value shown without tolerances.

Microchip Technology Drawing C04-081B

24-Lead Plastic Small Outline (OG) – Wide, 7.50 mm Body [SOIC]

Note: For the most current package drawings, please see the Microchip Packaging Specification located at http://www.microchip.com/packaging

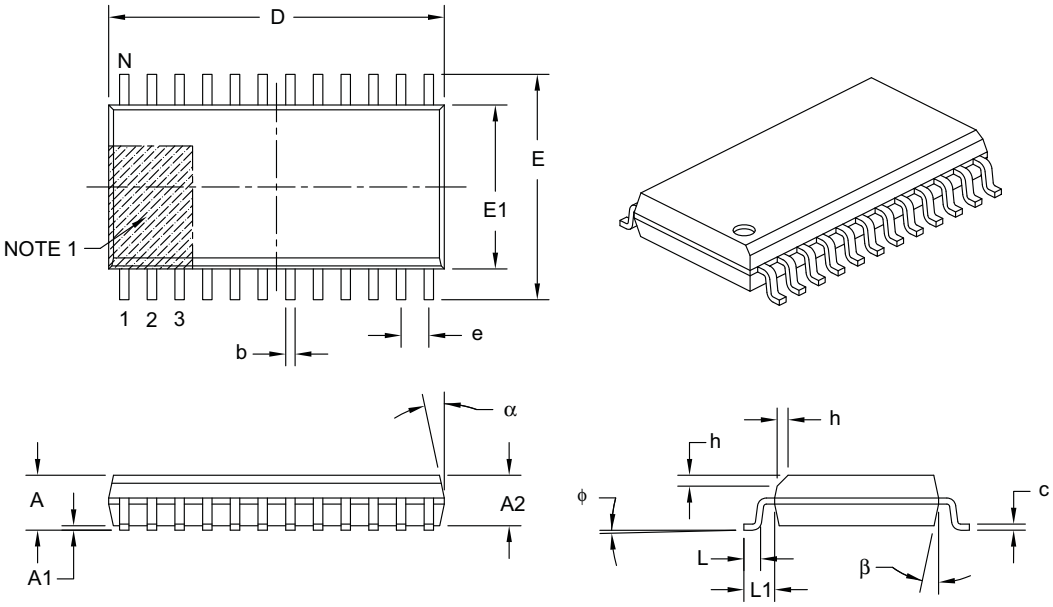

Units		MILLIMETERS		
Dimension Limits		MIN	NOM	MAX
Number of Pins	N	24		
Pitch	e	1.27 BSC		
Overall Height	A	–	–	2.65
Molded Package Thickness	A2	2.05	–	–
Standoff §	A1	0.10	–	0.30
Overall Width	E	10.30 BSC		
Molded Package Width	E1	7.50 BSC		
Overall Length	D	15.40 BSC		
Chamfer (optional)	h	0.25	–	0.75
Foot Length	L	0.40	–	1.27
Footprint	L1	1.40 REF		
Foot Angle	ϕ	0°	–	8°
Lead Thickness	c	0.20	–	0.33
Lead Width	b	0.31	–	0.51
Mold Draft Angle Top	α	5°	–	15°
Mold Draft Angle Bottom	β	5°	–	15°

Notes:

1. Pin 1 visual index feature may vary, but must be located within the hatched area.
2. § Significant Characteristic.
3. Dimensions D and E1 do not include mold flash or protrusions. Mold flash or protrusions shall not exceed 0.15 mm per side.
4. Dimensioning and tolerancing per ASME Y14.5M.

   BSC: Basic Dimension. Theoretically exact value shown without tolerances.
   REF: Reference Dimension, usually without tolerance, for information purposes only.

Microchip Technology Drawing C04-025B

28-Lead Plastic Leaded Chip Carrier (LI) – Square [PLCC]

Note: For the most current package drawings, please see the Microchip Packaging Specification located at http://www.microchip.com/packaging

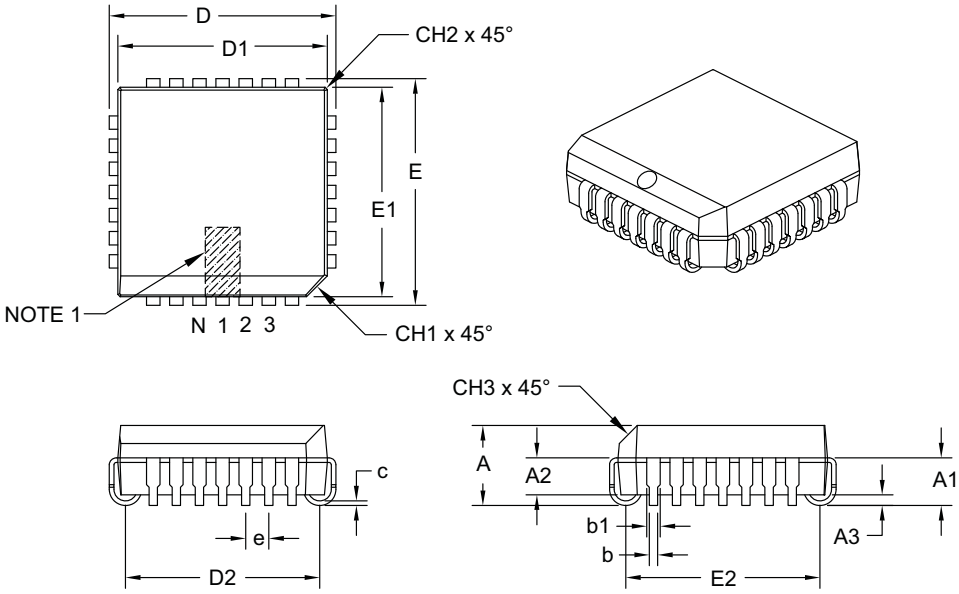

Units		INCHES		
Dimension Limits		MIN	NOM	MAX
Number of Pins	N		28	
Pitch	e		.050	
Overall Height	A	.165	.172	.180
Contact Height	A1	.090	.105	.120
Molded Package to Contact	A2	.062	–	.083
Standoff §	A3	.020	–	–
Corner Chamfer	CH1	.042	–	.048
Chamfers	CH2	–	–	.020
Side Chamfer	CH3	.042	–	.056
Overall Width	E	.485	.490	.495
Overall Length	D	.485	.490	.495
Molded Package Width	E1	.450	.453	.456
Molded Package Length	D1	.450	.453	.456
Footprint Width	E2	.382	.410	.438
Footprint Length	D2	.382	.410	.438
Lead Thickness	c	.0075	–	.0125
Upper Lead Width	b1	.026	–	.032
Lower Lead Width	b	.013	–	.021

Notes:

1. Pin 1 visual index feature may vary, but must be located within the hatched area.
2. § Significant Characteristic.
3. Dimensions D1 and E1 do not include mold flash or protrusions. Mold flash or protrusions shall not exceed .010" per side.
4. Dimensioning and tolerancing per ASME Y14.5M.

Microchip Technology Drawing C04-026B

6.2 Taping Form

Component Taping Orientation for 28-Lead PLCC Devices

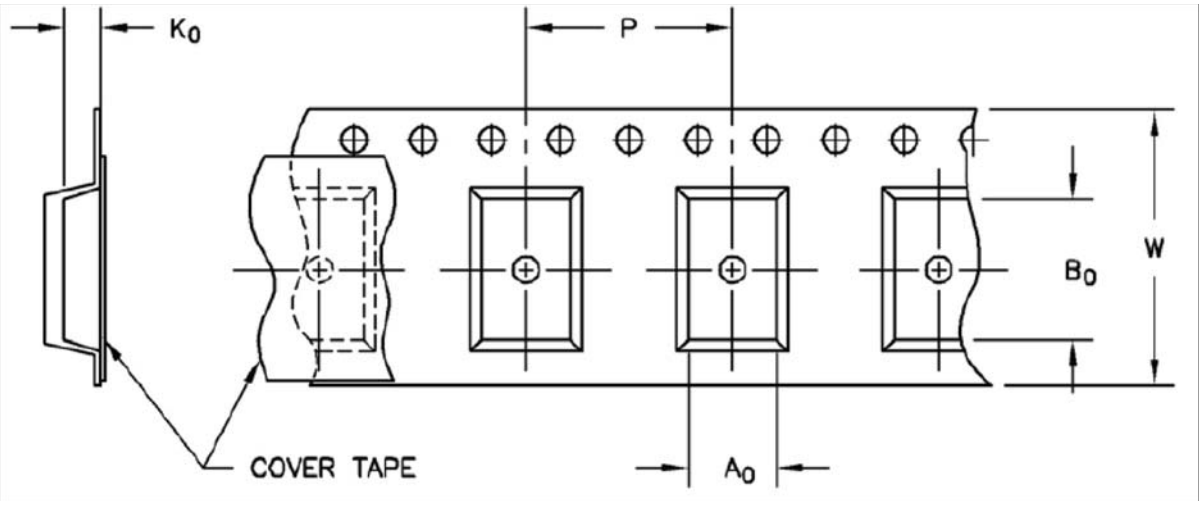

Standard Reel Component Orientation
for 713 Suffix Device

Carrier Tape, Number of Components Per Reel and Reel Size

Package	Carrier Width (W)	Pitch (P)	Part Per Full Reel	Reel Size
24-Lead PLCC	24 mm	16 mm	750	330 mm

APPENDIX A: REVISION HISTORY

Revision D (July 2008)

The following is the list of modifications:

1. Changed Operating Temperature in Absolute Maximum Ratings to -40°C to +85°C.
2. Added Packaging Marking information.
3. Added Package Outline Drawings.
4. Added **Appendix A: "Revision History"**
5. Added "**Product Identification System".**

Revision C (January 2006)

- Undocumented changes

Revision B (May 2002)

- Undocumented changes

Revision A (March 2001)

- Original Release of this Document.

NOTES:

PRODUCT IDENTIFICATION SYSTEM

To order or obtain information, e.g., on pricing or delivery, refer to the factory or the listed sales office.

PART NO.	X	/XX
Device	Temperature Range	Package

Device:	TC14433:	3 1/2 Digit, A/D Converter
	TC14433T:	3 1/2 Digit, A/D Converter (Tape and Reel)
	TC14433A:	3 1/2 Digit, A/D Converter
	TC14433AT:	3 1/2 Digit, A/D Converter (Tape and Reel)
Temperature Range:	E =	-40°C to +85°C
Package:	LI =	Plastic Leaded Chip Carrier, Square, 28-lead
	PG =	Plastic Dual In-Line, 600 mil Body, 24-lead
	OG =	Plastic Small Outline, Wide 7.50 mm, 24-lead

Examples:

a)	TC14433ELI:	24LD PLCC package.
b)	TC14433TELI:	Tape and Reel, 24LD PLCC package.
c)	TC14433EPG:	24LD PDIP package.
d)	TC14433TEPG:	Tape and Reel, 24LD PDIP package.
e)	TC14433EOG:	24LD SOIC package.
f)	TC14433TEOG:	Tape and Reel, 24-LD SOIC package.
a)	TC14433AELI:	28LD PLCC package.
b)	TC14433ATELI:	Tape and Reel, 28LD PLCC package.
c)	TC14433AEPG:	24LD PDIP package.
d)	TC14433ATEPG:	Tape and Reel, 24LD PDIP package.
e)	TC14433AEOG:	24LD SOIC package.
f)	TC14433ATEOG:	Tape and Reel, 24-LD SOIC package.

NOTES:

Note the following details of the code protection feature on Microchip devices:

- Microchip products meet the specification contained in their particular Microchip Data Sheet.
- Microchip believes that its family of products is one of the most secure families of its kind on the market today, when used in the intended manner and under normal conditions.
- There are dishonest and possibly illegal methods used to breach the code protection feature. All of these methods, to our knowledge, require using the Microchip products in a manner outside the operating specifications contained in Microchip's Data Sheets. Most likely, the person doing so is engaged in theft of intellectual property.
- Microchip is willing to work with the customer who is concerned about the integrity of their code.
- Neither Microchip nor any other semiconductor manufacturer can guarantee the security of their code. Code protection does not mean that we are guaranteeing the product as "unbreakable."

Code protection is constantly evolving. We at Microchip are committed to continuously improving the code protection features of our products. Attempts to break Microchip's code protection feature may be a violation of the Digital Millennium Copyright Act. If such acts allow unauthorized access to your software or other copyrighted work, you may have a right to sue for relief under that Act.

Trademarks

Printed on recycled paper.

QUALITY MANAGEMENT SYSTEM
CERTIFIED BY DNV
ISO/TS 16949:2002

Microchip received ISO/TS-16949:2002 certification for its worldwide headquarters, design and wafer fabrication facilities in Chandler and Tempe, Arizona; Gresham, Oregon and design centers in California and India. The Company's quality system processes and procedures are for its PIC® MCUs and dsPIC® DSCs, KEELOQ® code hopping devices, Serial EEPROMs, microperipherals, nonvolatile memory and analog products. In addition, Microchip's quality system for the design and manufacture of development systems is ISO 9001:2000 certified.

WORLDWIDE SALES AND SERVICE

AMERICAS

Corporate Office
2355 West Chandler Blvd.
Chandler, AZ 85224-6199
Tel: 480-792-7200
Fax: 480-792-7277
Technical Support:
http://support.microchip.com
Web Address:
www.microchip.com

Atlanta
Duluth, GA
Tel: 678-957-9614
Fax: 678-957-1455

Boston
Westborough, MA
Tel: 774-760-0087
Fax: 774-760-0088

Chicago
Itasca, IL
Tel: 630-285-0071
Fax: 630-285-0075

Dallas
Addison, TX
Tel: 972-818-7423
Fax: 972-818-2924

Detroit
Farmington Hills, MI
Tel: 248-538-2250
Fax: 248-538-2260

Kokomo
Kokomo, IN
Tel: 765-864-8360
Fax: 765-864-8387

Los Angeles
Mission Viejo, CA
Tel: 949-462-9523
Fax: 949-462-9608

Santa Clara
Santa Clara, CA
Tel: 408-961-6444
Fax: 408-961-6445

Toronto
Mississauga, Ontario,
Canada
Tel: 905-673-0699
Fax: 905-673-6509

ASIA/PACIFIC

Asia Pacific Office
Suites 3707-14, 37th Floor
Tower 6, The Gateway
Harbour City, Kowloon
Hong Kong
Tel: 852-2401-1200
Fax: 852-2401-3431

Australia - Sydney
Tel: 61-2-9868-6733
Fax: 61-2-9868-6755

China - Beijing
Tel: 86-10-8528-2100
Fax: 86-10-8528-2104

China - Chengdu
Tel: 86-28-8665-5511
Fax: 86-28-8665-7889

China - Hong Kong SAR
Tel: 852-2401-1200
Fax: 852-2401-3431

China - Nanjing
Tel: 86-25-8473-2460
Fax: 86-25-8473-2470

China - Qingdao
Tel: 86-532-8502-7355
Fax: 86-532-8502-7205

China - Shanghai
Tel: 86-21-5407-5533
Fax: 86-21-5407-5066

China - Shenyang
Tel: 86-24-2334-2829
Fax: 86-24-2334-2393

China - Shenzhen
Tel: 86-755-8203-2660
Fax: 86-755-8203-1760

China - Wuhan
Tel: 86-27-5980-5300
Fax: 86-27-5980-5118

China - Xiamen
Tel: 86-592-2388138
Fax: 86-592-2388130

China - Xian
Tel: 86-29-8833-7252
Fax: 86-29-8833-7256

China - Zhuhai
Tel: 86-756-3210040
Fax: 86-756-3210049

ASIA/PACIFIC

India - Bangalore
Tel: 91-80-4182-8400
Fax: 91-80-4182-8422

India - New Delhi
Tel: 91-11-4160-8631
Fax: 91-11-4160-8632

India - Pune
Tel: 91-20-2566-1512
Fax: 91-20-2566-1513

Japan - Yokohama
Tel: 81-45-471- 6166
Fax: 81-45-471-6122

Korea - Daegu
Tel: 82-53-744-4301
Fax: 82-53-744-4302

Korea - Seoul
Tel: 82-2-554-7200
Fax: 82-2-558-5932 or
82-2-558-5934

Malaysia - Kuala Lumpur
Tel: 60-3-6201-9857
Fax: 60-3-6201-9859

Malaysia - Penang
Tel: 60-4-227-8870
Fax: 60-4-227-4068

Philippines - Manila
Tel: 63-2-634-9065
Fax: 63-2-634-9069

Singapore
Tel: 65-6334-8870
Fax: 65-6334-8850

Taiwan - Hsin Chu
Tel: 886-3-572-9526
Fax: 886-3-572-6459

Taiwan - Kaohsiung
Tel: 886-7-536-4818
Fax: 886-7-536-4803

Taiwan - Taipei
Tel: 886-2-2500-6610
Fax: 886-2-2508-0102

Thailand - Bangkok
Tel: 66-2-694-1351
Fax: 66-2-694-1350

EUROPE

Austria - Wels
Tel: 43-7242-2244-39
Fax: 43-7242-2244-393

Denmark - Copenhagen
Tel: 45-4450-2828
Fax: 45-4485-2829

France - Paris
Tel: 33-1-69-53-63-20
Fax: 33-1-69-30-90-79

Germany - Munich
Tel: 49-89-627-144-0
Fax: 49-89-627-144-44

Italy - Milan
Tel: 39-0331-742611
Fax: 39-0331-466781

Netherlands - Drunen
Tel: 31-416-690399
Fax: 31-416-690340

Spain - Madrid
Tel: 34-91-708-08-90
Fax: 34-91-708-08-91

UK - Wokingham
Tel: 44-118-921-5869
Fax: 44-118-921-5820

01/02/08