Specification of Simple Packaged Crystal Oscillators

1. NDK Part Number NZ2520SH-16.64M-RNA5013A
2. Chipset Maker Renesas
3. Chipset Name R-Car H3
4. NDK Specification Number RNA5013A
5. Type NZ2520SH
6. Absolute Maximum ratings

	Item	Ratings			Notes
		Min.	Max.	Units	
1	Supply voltage	-0.3	+4.0	V	-
2	Storage temp. rage	-55	+125	℃	-

7. Electrical Specification

	Parameters	SYM.	Electrical Spec.				Notes
			Min.	Typ.	Max.	Units	
1	Nominal frequency	fnom		16.64		MHz	-
2	Supply voltage	Vcc	1.62	1.8	1.98	V	-
3	Current consumption (Operating)	I_{CC}	-	-	3.5	mA	at 1.8V, 25°C
4	Current consumption (Stand-by)	I_{ST}	-	-	20	μA	at 1.8V, 25°C
5	Output level	-	CMOS				-
6	Load capacitance	CL			15	pF	-
7	Operating temp. rage	T_{opr}	-40	-	+105	℃	-
8	Overall frequency tolerance	$\Delta f/f_{nom}$	-40	-	+40	ppm	*1
9	Output voltage	V_{OL}	-	-	0.1 V_{CC}	V	-
		V_{OH}	0.9 V_{CC}	-	-	V	-
10	Rise time (T_r), Fall time (T_f)	T_r/T_f	-	-	6	ns	0.1 V_{CC} to 0.9 V_{CC}
11	Symmetry	SYM	45	-	55	%	at 1/2 V_{CC}
12	Start-up time	T_{su}	-	-	4	ms	
13	Output wave form	-	Rectangular				-
14	Stand-by function						
	#1 PAD input		# 3 PAD output				
	H level (0.7 V_{CC} to V_{CC}) or Open		Operating				
	L level (0.3 V_{CC} max.)		High impedance				

*1 'Inclusive of frequency. tolerance (at 25 °C), requency/temperature characteristics, frequency/voltage coefficient.
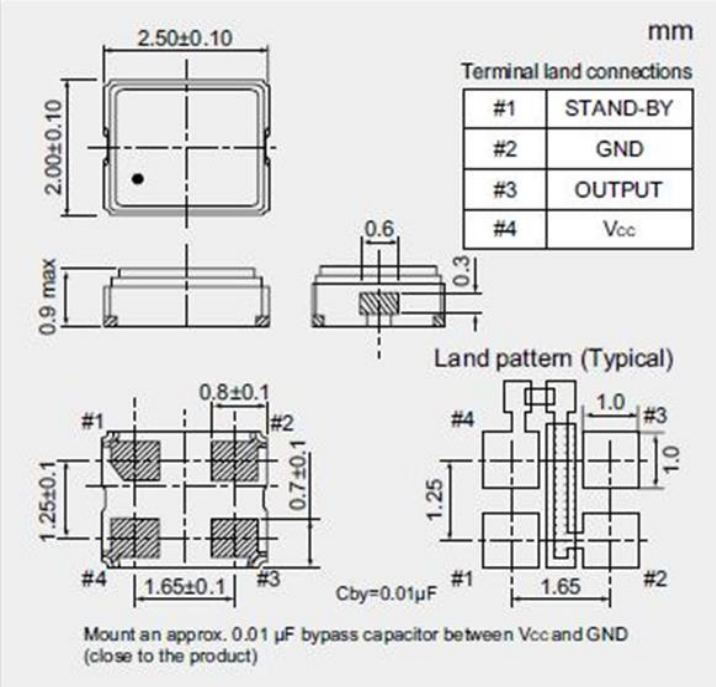
8. Dimension