②

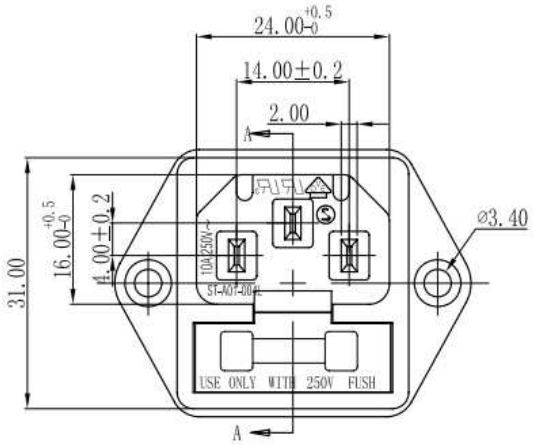

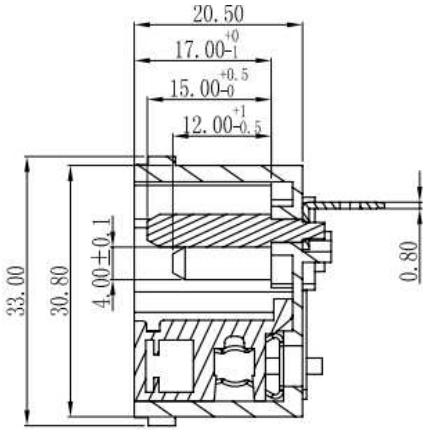

SECTION A-A

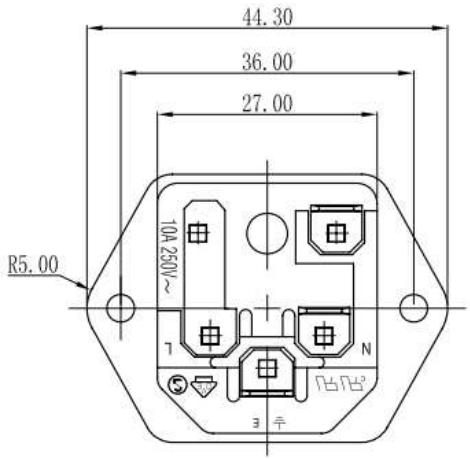

NOTES:

1.Insulator: PBT UL94-0 Color : Black
2.Soldering: Alloy Copper Tin PLATING
3.Contact : Alloy Copper Ni PLATING
4.Electrical: 10A/15A 250V~
5.Approval: UL CUL VDE SEMKO CCC

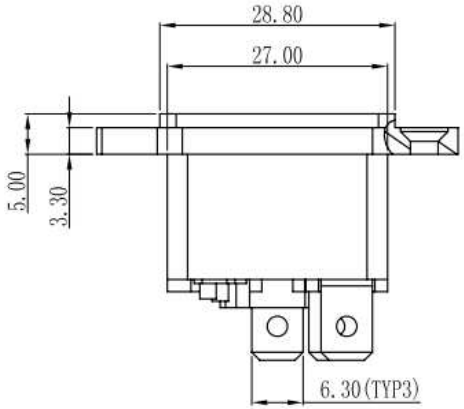

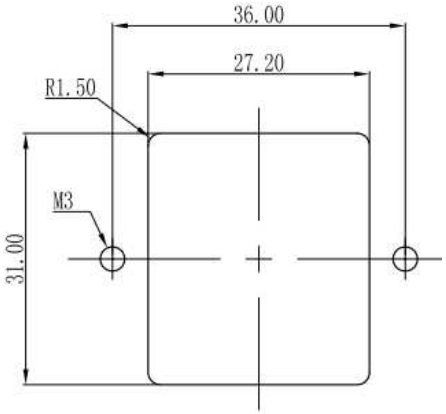

PANEL CUT-OUT

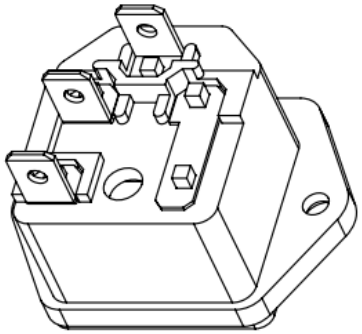

RoHS compliant

Scale	1:1					Date	Name	Customer-No.
TOLERANCE					Drawn	08.07.2009	Dean	
0-10	±0.1				Approved	18.12.2012	Winnie	ASSMANN WSW-No. A-KGS-F/T2F
10-30	±0.3							
30-100	±0.5							
DIM	TOL	②	Change of plant	18.12.2012	Winnie			Drawing-No. ASS 0889P CO rev02
		①	Drawn	08.07.2009	Dean			
UNIT	mm	Id.	Modification	Date	Name			Replace SHEET

ASSMANN WSW components