MATERIAL NUMBER	ENGINEERING PART NUMBER	COUPLING NUT MATERIAL	COUPLING NUT FINISH
1300170011	1A3006-34	BRASS	NICKEL PLATED
1300170012	1A3006-348	STAINLESS STEEL	PASSIVATED

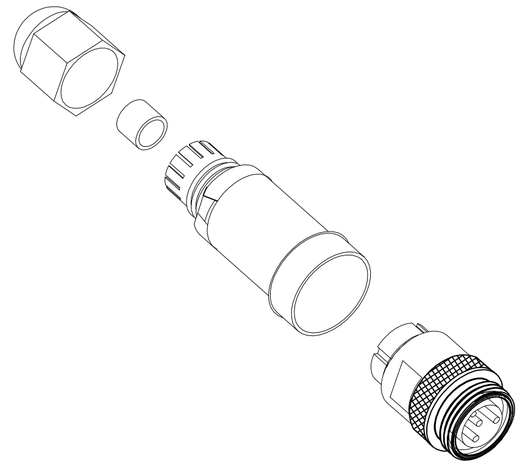

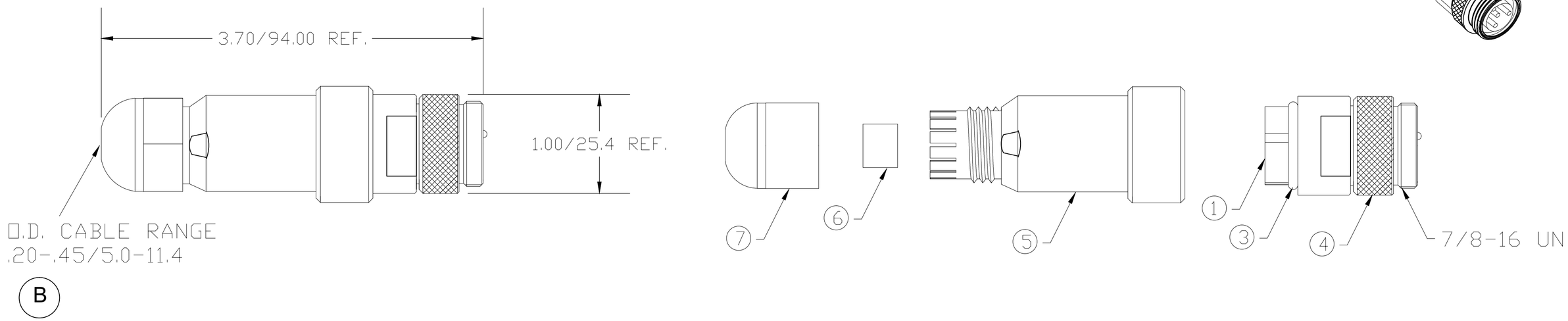

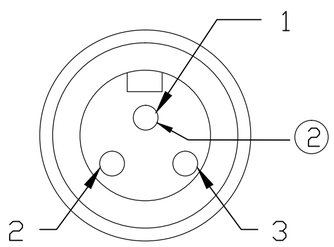

MALE FACE VIEW

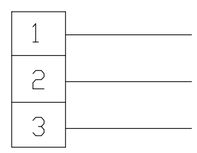

WIRING CHART

VOLTAGE RATING	600VAC/VDC
AMPERAGE RATING	13 AMPS
PROTECTION	IP67
OPERATING TEMPERATURE	-20°C TO 80°C
CSA CERTIFICATIONS	CSA CERTIFIED, FILE NO. LR6837

ITEM	COMPONENT	MATERIAL	FINISH
1	INSERT	NYLON	BLACK
2	PIN CONTACTS	COPPER ALLOY	GOLD PLATED
3	O-RING	NITRILE	BLACK
4	COUPLING NUT	SEE CHART	SEE CHART
5	MOLDED BODY	NYLON	BLACK
6	GROMMET	NITRILE	BLACK
7	CORD GRIP BODY	NYLON	BLACK

REV	DESCRIPTION
B	OD RANGE WAS .20-.48 EC NO: IPG2013-1684 5/1/13 DRWN: RSTONE --- CH'KD: BW APPR: BWOODMAN2009/08/26

QUALITY SYMBOL
▼=0
C=0

GENERAL TOLERANCES (UNLESS SPECIFIED)

	mm	INCH
4 PLACES	±---	±---
3 PLACES	±---	±---
2 PLACES	±---	±.010
1 PLACE	±.03	±---
ANGULAR ±1/2°		

DRAFT WHERE APPLICABLE MUST REMAIN WITHIN DIMENSIONS

DIMENSION STYLE: IN/MM
SCALE: ---
DESIGN UNITS: INCH
THIRD ANGLE PROJECTION

DRAWN BY: TWOLDEGE DATE: 2009/08/25
CHECKED BY: BWOODMAN DATE: 2009/08/25
APPROVED BY: JFMURPHY DATE: 2009/08/26

TITLE: MINI CHANGE ATTACHABLE 3-POLE MALE ST .20-.45 O.D. CABLE RANGE

molex MOLEX INCORPORATED

MATERIAL NO.: SEE CHART
DOCUMENT NO.: SD-130017-007
SHEET NO.: 1 0F 1
SIZE: C

THIS DRAWING CONTAINS INFORMATION THAT IS PROPRIETARY TO MOLEX INCORPORATED AND SHOULD NOT BE USED WITHOUT WRITTEN PERMISSION