Identification	Cable entry	Part number Low construction	Part number High construction	Drawing Dimensions in mm
Han® B, Surface mounted housings, side entry, Han-Easy Lock® 	1xM25 1xM32 2xM25 2xM32 2xM40	19 30 024 1231 19 30 024 1271	19 30 024 0232 19 30 024 0272 19 30 024 0273	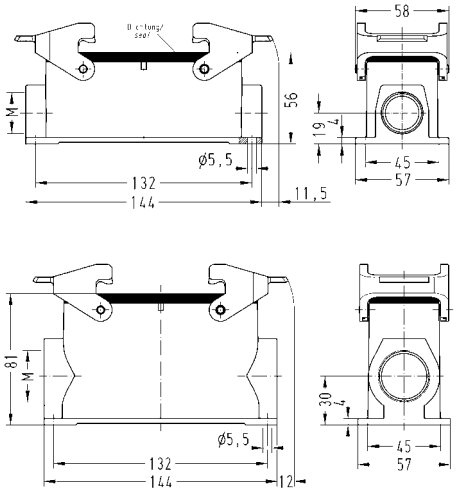
Han® B, Cover for housings, plastic 		09 30 024 5405	09 30 024 5405	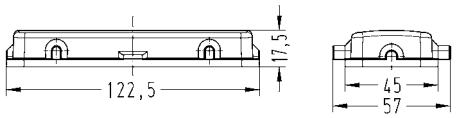
Han® B, Cover for housings, metal, with securing flex 		09 30 024 5425	09 30 024 5425	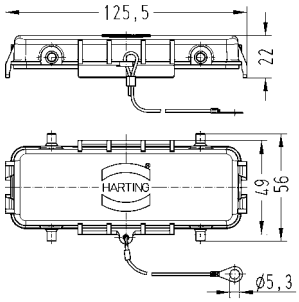
Han® B, Cable to cable housings, top entry, Han-Easy Lock® 	1xM32 1xM40	19 30 024 1732	19 30 024 0737 19 30 024 0738	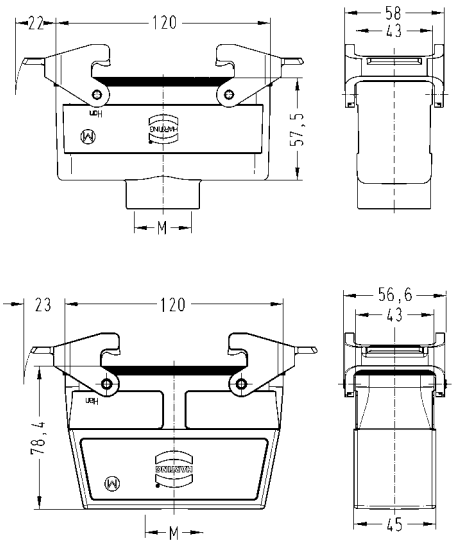

Hoods Housings