THIS DRAWING IS UNPUBLISHED. RELEASED FOR PUBLICATION -.-.
© COPYRIGHT - BY TYCO ELECTRONICS CORPORATION. ALL RIGHTS RESERVED.

LOC	DIST
A	66

REVISIONS

P	LTR	DESCRIPTION	DATE	DWN	APVD
	B	ECR-07-013305	6-2007	MY	GB

PART NUMBER	REV	FIRST USED	TERMINATOR	FEED TYPE	DESCRIPTION
1528474-1	B	-	LEADMAKER	MECH POST FEED	CUTS CARRIER
1528474-2	B	-	BENCH	MECH PRE FEED	CUTS CARRIER
1528474-6	B	-	LEADMAKER	MECH POST FEED	CONTINUOUS CARRIER
7-1528474-1	B	-	LEADMAKER	MECH POST FEED	-1 AND SPARE PARTS
7-1528474-2	B	-	BENCH	MECH PRE FEED	-2 AND SPARE PARTS
7-1528474-6	B	-	LEADMAKER	MECH POST FEED	-6 AND SPARE PARTS
7-1528474-7	A	-	-	-	SPARE PARTS KIT

CRIMP DATA AMP TERMINAL AMP CRIMP SPECS

TERMINAL NAME: 2.3 UNSEALED RECEPTACLE CONTACT

CRIMP	SIZE	TYPE	RANGE
WIRE	2.35 [.093 IN]	F	0.79mm² - 1.96mm² △4
INSUL	2.90 [.114 IN]	O/V	1.5-2.7 [.059-.106 IN]

WIRE STRIP LENGTH 4.50-5.50 [.177-.217 IN]

APPL INSTRUCTION 408-8322 & 408-8490

TERMINAL - - APPL SPEC 114-5325 △4 -

FEED 13.00 [5.12 IN]

TERMINALS APPLIED

1612892-2	-	-	-	-
-	-	-	-	-
-	-	-	-	-
-	-	-	-	-
-	-	-	-	-
-	-	-	-	-
-	-	-	-	-
-	-	-	-	-

WIRE SIZE mm² AWG	CRIMP HEIGHT *	REF SETTING
△4 2.00mm²	1.47 ±0.05 [.058 ±.002 IN]	B 6
△4 1.00mm²	1.19 ±0.05 [.047 ±.002 IN]	D 6
△4 1.25mm²	1.28 ±0.05 [.050 ±.002 IN]	C 9
△4 0.85mm²	1.14 ±0.05 [.045 ±.002 IN]	E 1
△4 0.75fmm²	1.11 ±0.05 [.044 ±.002 IN]	E 1
-	-	-
-	-	-
-	-	-
-	-	-
-	-	-
-	-	-
-	-	-
-	-	-
-	-	-
-	-	-

SET UP GAGE	LAYOUT
458637-3	L1528475

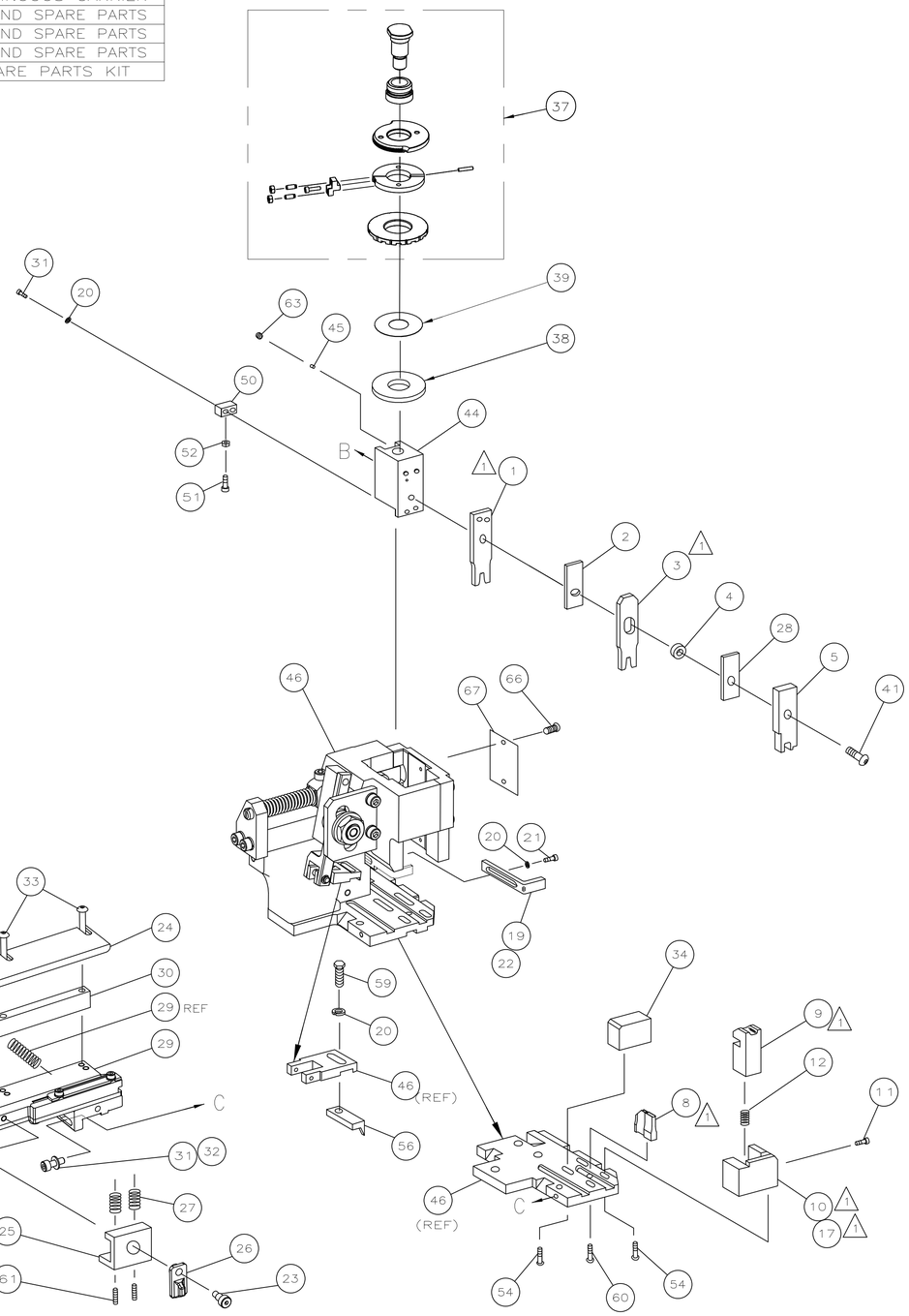

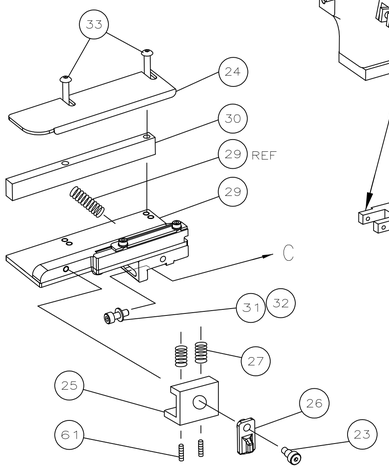

△1 RECOMMENDED SPARE PARTS.
2. GREASE RAM, CAM, CAM FOLLOWER AND FEED ROD LIGHTLY.
3. LUBRICATE DAILY PER THE APPLICATOR INSTRUCTION SHEET SUPPLIED WITH THE APPLICATOR.
△4 SEE APPLICATION SPEC. FOR SPECIFIC WIRE DETAILS.

VIEW B ROTATED 180°

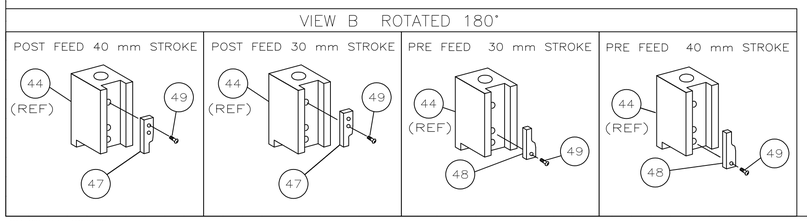

* WARNING:

ON INSTALLATION, SET WIRE DISC TO LARGEST WIRE SIZE SETTING. USE OF SETTINGS BELOW MIN REQUIRED CRIMP HEIGHT SETTING WILL CAUSE DAMAGE TO CRIMP TOOLING.

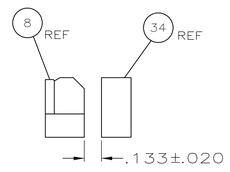

ITEM 34 LOCATION

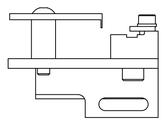

									ITEM NO
									73
-	1	1	1	1	1	1	1528474	PRINT, APPLICATOR LOG SHEET	72
-	1	1	1	1	1	1	1338705-3	DOCUMENTATION PACKAGE	71
									70
									69
									68
-	1	1	1	1	1	1	461264-5	PLATE, IDENTIFICATION	67
-	2	2	2	2	2	2	21017-2	SCR,DRIVE(#2x.19)ID PLATE	66
									65
									64
-	1	1	1	1	1	1	3-18031-0	SCR,SKT SET(M6X6)RAM	63
									62
-	2	2	2	2	2	2	2-18032-5	SCR,SKT,SET(M5X20)DRAG	61
-	1	1	1	1	1	1	18024-7	SCR,BHC(M4X10)ANVIL	60
-	1	1	1	1	1	1	5-18022-2	SCR,HEX(M4X8)FEED FINGER	59
									58
									57
-	1	1	1	1	1	1	1338685-1	PAWL, FEED	56
									55
-	4	4	4	4	4	4	18024-8	SCR,BHC(M4x12)SHEAR HOLDER	54
									53
-	1	1	1	1	1	1	18030-1	NUT,HEX(M3)HOLD DOWN	52
-	1	1	1	1	1	1	811242-5	BUMPER, HOLDDOWN	51
-	1	1	1	1	1	1	690753-2	SPACER, TONKER	50
-	1	1	1	1	1	1	18024-3	SCR,BHC(M3X10)CAM	49
-	-	1	-	-	1	-	1338675-1	CAM, PRE FEED 30 & 40 mm ST	48
-	1	-	1	1	-	1	1338676-1	CAM, POST FEED 30 & 40 mm ST	47
-	1	1	1	1	1	1	1320999-3	APPLICATOR BASIC SUBASSY	46
-	1	1	1	1	1	1	690191-1	PLUG, NYLON	45
-	1	1	1	1	1	1	1338660-1	RAM	44
									43
									42
-	1	1	1	1	1	1	2-18024-6	SCR,BHC(M8X25)RAM	41
									40
-	1	1	1	1	1	1	690125-1	SHIM SUBASSY	39
-	1	1	1	1	1	1	469367-9	SPACER, FINE ADJUST	38
-	1	1	1	1	1	1	879103-2	FINE ADJUST HEAD SUBASSY	37
									36
									35
-	1	1	1	1	1	1	1320934-1	SUPPORT, TERMINAL	34
-	2	2	2	2	2	2	1-18024-0	SCR,BHC(M4X20)STRIP GUIDE	33
-	1	1	1	1	1	1	18027-2	WASHER, FLAT(M4)	32
-	3	3	3	3	3	3	1-18023-2	SCR,SKT CAP(M4X12)MOUNT BLOCK	31
-	1	1	1	1	1	1	1320908-1	SPACER, STRIP GUIDE	30
-	1	1	1	1	1	1	1633073-1	STRIP GUIDE PLATE ASSY	29
-	1	1	1	1	1	1	1-455888-6	SPACER, FRONT SHEAR DEP	28
-	2	2	2	2	2	2	1-22284-0	SPRING, DRAG	27
-	1	1	1	1	1	1	356835-1	LEVER, DRAG RELEASE	26
-	1	1	1	1	1	1	240792-1	DRAG, TERMINAL	25
-	1	1	1	1	1	1	1320928-1	PLATE, STRIP GUIDE	24
-	1	1	1	1	1	1	980371-4	SCR,SHC SHLD	23
-	1	-	1	1	-	1	690472-2	STRIPPER	22
-	1	1	1	1	1	1	1-18023-1	SCR,SHC(M4X10)STRIPPER	21
-	4	4	4	4	4	4	18025-2	WASHER,LOCK(M4)STRIPPER	20
-	-	1	-	-	1	-	690472-1	STRIPPER	19
									18
△1 -	1	-	-	1	-	-	1338684-1	HOLDER, SHEAR, FRONT (NO-CUT)	17
									16
									15
									14
									13
-	1	1	1	1	1	1	3-22280-3	SPRING, SHEAR	12
-	1	1	1	1	1	1	356885-4	STOP, SHEAR	11
-	-	1	1	-	1	1	1320921-1	HOLDER, SHEAR, FRONT (CUT)	10
△1 -	1	1	1	1	1	1	454276-1	SHEAR, FLOAT (FRONT)	9
1	2	2	2	1	1	1	6-1333225-7	ANVIL	8
									7
									6
-	1	1	1	1	1	1	1-455889-4	DEPRESSOR, SHEAR (FRONT)	5
-	1	1	1	1	1	1	238011-4	SPACER, BLOCK CRIMPER	4
△1 1	2	2	2	1	1	1	1596587-2	CRIMPER, INSULATION	3
-	1	1	1	1	1	1	455888-4	SPACER, CRIMPER	2
△1 1	2	2	2	1	1	1	1463696-2	CRIMPER, WIRE	1
-77	-76	-72	-71	-6	-2	-1	PART NO	DESCRIPTION	ITEM NO

QTY REQD PER ASSY — PARTS LIST

THIS DRAWING IS A CONTROLLED DOCUMENT.

DIMENSIONS: INCHES

TOLERANCES UNLESS OTHERWISE SPECIFIED:
0 PLC ± -
1 PLC ± -
2 PLC ± -
3 PLC ± -
4 PLC ± -
ANGLES ± -

MATERIAL -
FINISH -

DWN 18JAN05 L.LOFTHOUSE
CHK -
APVD 18JAN05 F.BACKHURST
PRODUCT SPEC -
APPLICATION SPEC -
WEIGHT -

Tyco Electronics
Tyco Electronics Corporation
Harrisburg, PA 17105-3608

NAME FINE ADJ SIDE FD HD-I APPL
-
-

SIZE A1 | CAGE CODE 00779 | DRAWING NO C-1528474 | RESTRICTED TO -

CUSTOMER DRAWING | SCALE - | SHEET 1 OF 1 | REV B

AMP 4805 REV 31MAR2000

06JUN2007 11:04am