MATERIAL NUMBER	ENG NO.	DESCRIPTION	INSULATING KEYING POSITION	HORSEPOWER RATING
1122191029	ARC30MHA01	ARC 30A MH 125VAC 1P+N+G	7	1 HP
1122191030	ARC30MHB02	ARC 30A MH 250VAC 2P+G		3 HP
1122191031	ARC30MHB03	ARC 30A MH 250VAC 3P+G		5 HP
1122191032	ARC30MHAB04	ARC 30A MH 125/250VAC 2P+N+G		NA
1122191033	ARC30MHC02	ARC 30A MH 208VAC 2P+G	16	NA
1122191034	ARC30MHC03	ARC 30A MH 208VAC 3P+G		5 HP
1122191035	ARC30MHAC05	ARC 30A MH 120/208VAC 3P+N+G		NA
1122191036	ARC30MHD01	ARC 30A MH 277VAC 1P+N+G	4	NA
1122191037	ARC30MHE02	ARC 30A MH 480VAC 2P+G		NA
1122191038	ARC30MHE03	ARC 30A MH 480VAC 3P+G		NA
1122191039	ARC30MHDE05	ARC 30A MH 277/480VAC 3P+N+G		NA
1122191040	ARC30MHF02	ARC 30A MH 600VAC 2P+G	14	NA
1122191041	ARC30MHF03	ARC 30A MH 600VAC 3P+G		NA
1122191042	ARC30MHGF05	ARC 30A MH 347/600VAC 3P+N+G		NA

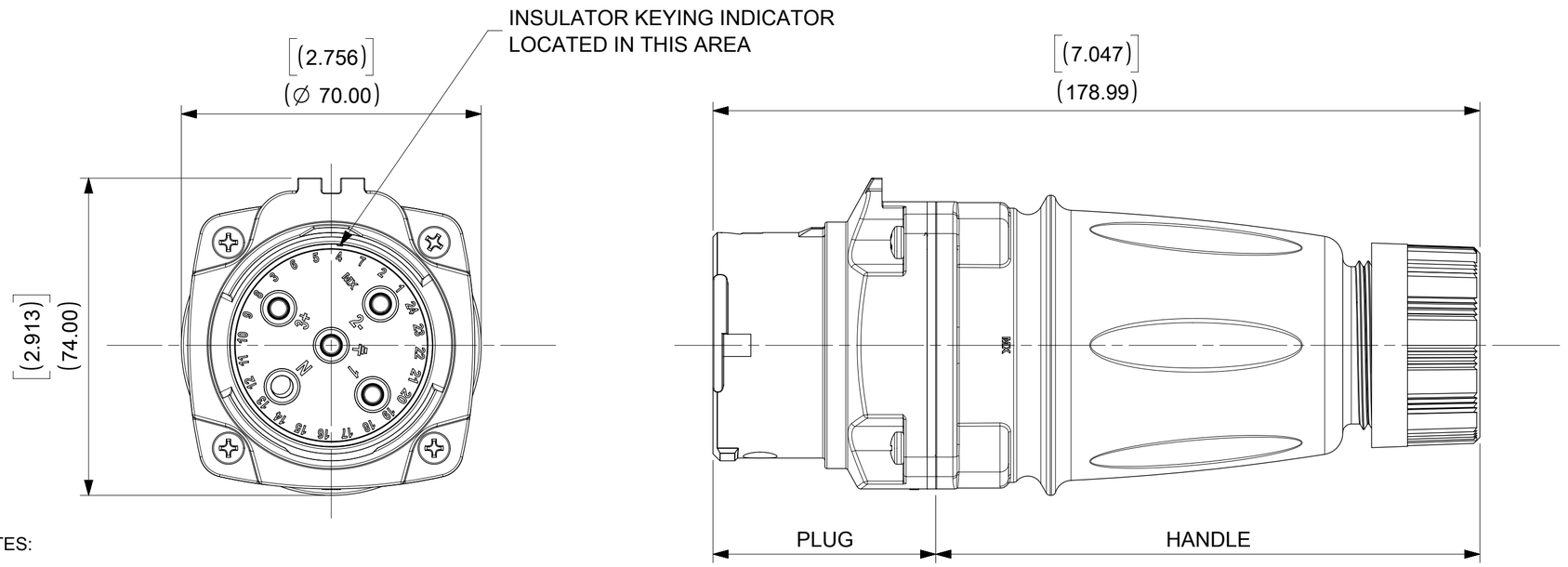

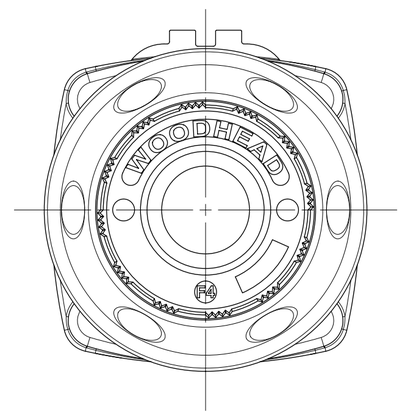

NOTES:

MATERIALS:
- HOUSINGS AND INSULATORS: GLASS FILLED PBT
- CONTACTS: COPPER ALLOY WITH A SILVER NICKEL TIP, SILVER PLATED
- MOUNTING GASKETS: SILICONE
- GROMMET - RUBBER
- FRICTION RING - NATURAL POLYETHYLENE
- COMPRESSION NUT - BLACK PBT
- SELF TAPPING SCREWS - STAINLESS STEEL
- PLUG CAP - RUBBER

RATINGS:
- CURRENT: 30 AMPS
- VOLTAGE AND HORSEPOWER: SEE TABLE
- OPERATING TEMPERATURE: -25°C(-13°F) TO 60°C(140°F)
- ENVIRONMENTAL: NEMA TYPE 4X
- WIRING CAPACITY: 12 AWG MIN. TO 8 AWG MAX.
- TORQUE TERMINAL SCREWS TO 1.7N-M (15 in/lbs)
- AGENCY: UL LISITING PENDING
  - SWITCH RATED RECEPTACLE/CONNECTOR
  - BRANCH CIRCUIT DISCONNECT SWITCH
  - MOTOR CIRCUIT DISCONNECT SWITCH IF HP RATED

PLUG, HANDLE AND PLUG CAP(NOT SHOWN IN ALL VIEWS) ARE PACKAGED AS SUB-ASSEMBLIES AND WILL REQUIRE END USER ASSEMBLY.

THIS DRAWING REPLACES SD-112219-103.

GROMMET P/N	GROMMET COLOR	CABLE DIAMETER RANGE
1301800411	GRAY	12.7mm - 15.9mm (0.500" - 0.625")
1301800283	ORANGE	15.9mm - 19.0mm (0.625" - 0.750")
1301800413	BLACK	19.0mm - 22.2mm (0.750" - 0.875")

ARC30MHE03 SHOWN

THIS DRAWING CONTAINS INFORMATION THAT IS PROPRIETARY TO MOLEX ELECTRONIC TECHNOLOGIES, LLC AND SHOULD NOT BE USED WITHOUT WRITTEN PERMISSION

QUALITY SYMBOLS: FA = 0; FC = 0; FB = 0; ▼ = 0; C = 0; ☒ = 0; ■ = 0; V = 0

REDRAWN IN NX
EC NO: 176476 2018/04/03
DRWN: VBASUTHKARP 2018/05/10
CHK'D: BRUPERT 2018/05/10
APPR: BRUPERT
REV B1

GENERAL TOLERANCES (UNLESS SPECIFIED)

	MM	INCH
4 PLACES	±	±
3 PLACES	±	± .005
2 PLACES	± 0.13	± .010
1 PLACES	± 0.25	± .020
0 PLACES	±	±

ANGULAR TOL ± 0.5°

DRAFT WHERE APPLICABLE MUST REMAIN WITHIN DIMENSIONS

DIMENSION UNITS: MM[INCH]
SCALE: 1:1
DRWN BY: KJ DATE: 09/20/2017
CHK'D BY: BR DATE: 09/20/2017
APPR BY: JM DATE: 09/20/2017
DRAWING SIZE: C
THIRD ANGLE PROJECTION

molex®

30A ArcArrest™
PLUG KIT
HANDLE W/O DRAWPLATES

PRODUCT CUSTOMER DRAWING

SERIES	MATERIAL NUMBER	CUSTOMER
112219	SEE TABLE	GENERAL MARKET

DOCUMENT NUMBER	DOC TYPE	DOC PART	SHEET NUMBER
1122191038	PSD	000	1 OF 1

RELEASE STATUS	P1	RELEASE DATE	2018/05/10 16:43:20

FORMAT: Eng-lega-master-tb-prod-C
REVISION: C
DATE: 2017/02/06