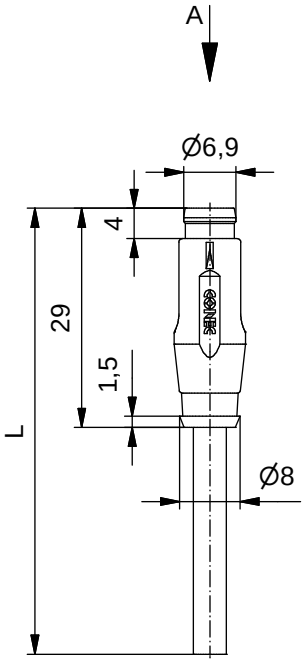

Technical specification :

Rated voltage: IEC 61076-2-104	50 V AV / 60 V DC
Current rating: IEC 61076-2-104	3 A bei 40°C
Insulation resistance: IEC 60512	>=100 MΩ
Pollution degree: IEC 60664-1	3/2
Degree of protection: IEC 60529	IP 67, in mated condition
Temperature range: EN 60512-11-10 EN 60512-11-4	-25°C ... +80°C -40°C -40°C ... +85°C
Mating cycles: IEC 60512-9a	>=100

Cable specification:

Temperatur range:	
static	-25°C ... +80°C
flexible	-5°C ... +80°C

Materials:

Contact:	CuZn, Ni3 Au 0,2 gal.
Contact carrier:	PA, UL 94 V-0
Moulding body:	TPU, UL 94 HB, grey

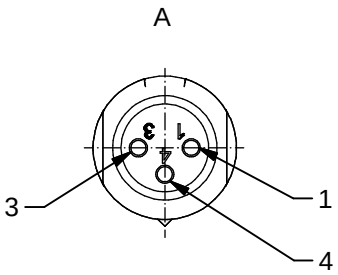

Contact assignment:

1 brown
3 blue
4 black

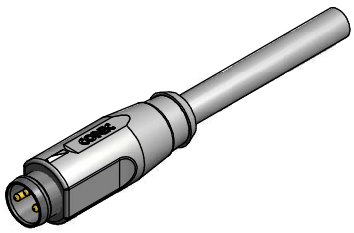

Part no:	Description:	Length L:	Cable:
42-10532	SAL - 8 - RSS3 - 2 / A1	2m	PVC, grey, 3x0,25mm² Cable: 781-A12300
42-10746	SAL - 8 - RSS3 - 3 / A1	3m	
42-10747	SAL - 8 - RSS3 - 5 / A1	5m	
42-10748	SAL - 8 - RSS3 - 10 / A1	10m	
42-xxxxx	SAL - 8 - RSS3 - ... / A1	x	

DO NOT ALTER CAD DRAWING BY HAND

RoHS & REACH compliant

Index: c 03.12.15 fro Ä5899
technical specificationan materials changed

dim. in mm

	date	name
drawn	23.09.09	Fromm
appd.	23.09.09	Mankopf

tolerance of cable: L <= 4m: L + 40mm
L > 4m: L + 1%

general tolerance:

0	± 0,50mm
0,0	± 0,25mm
0,00	± 0,10mm
∡	± 5°

THIS DRAWING MAY NOT BE COPIED OR REPRODUCED IN ANY WAY, AND MAY NOT BE PASSED ON TO A THIRD PARTY WITHOUT WRITTEN PERMISSION. OWNERSHIP AND COPYRIGHT OF CONEC GmbH

title:
Male connector Ø8 axial, snap

dwg no:
42K1A141

part no: