SHEET OF

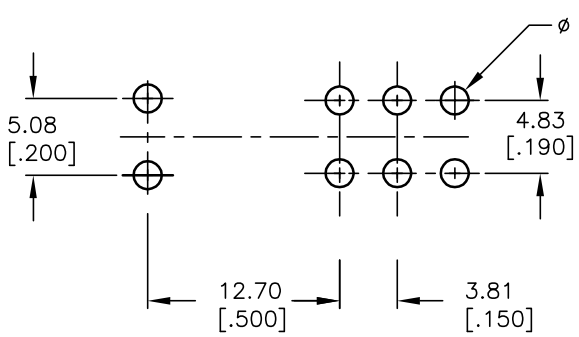

RECOMMENDED P.C.B. LAYOUT

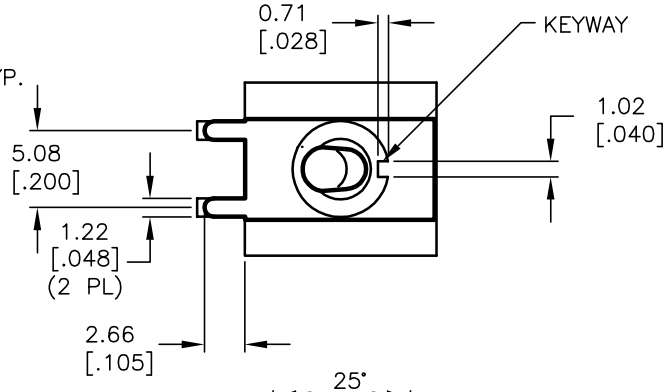

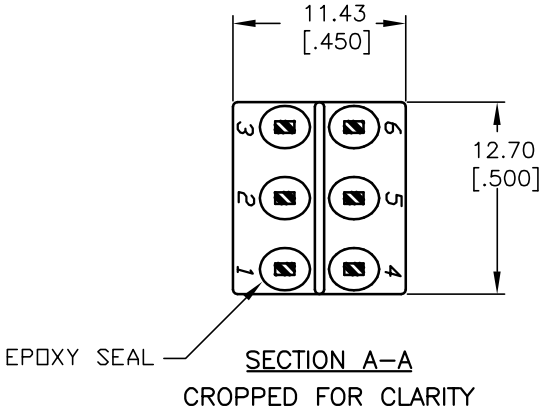

SECTION A–A
CROPPED FOR CLARITY

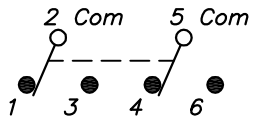

CIRCUIT: DPDT
CONTACT CONFIGURATION

SWITCH FUNCTION		
POS. 1	POS. 2	POS. 3
ON	OFF	ON
2-3,5-6	OPEN	2-1,5-4

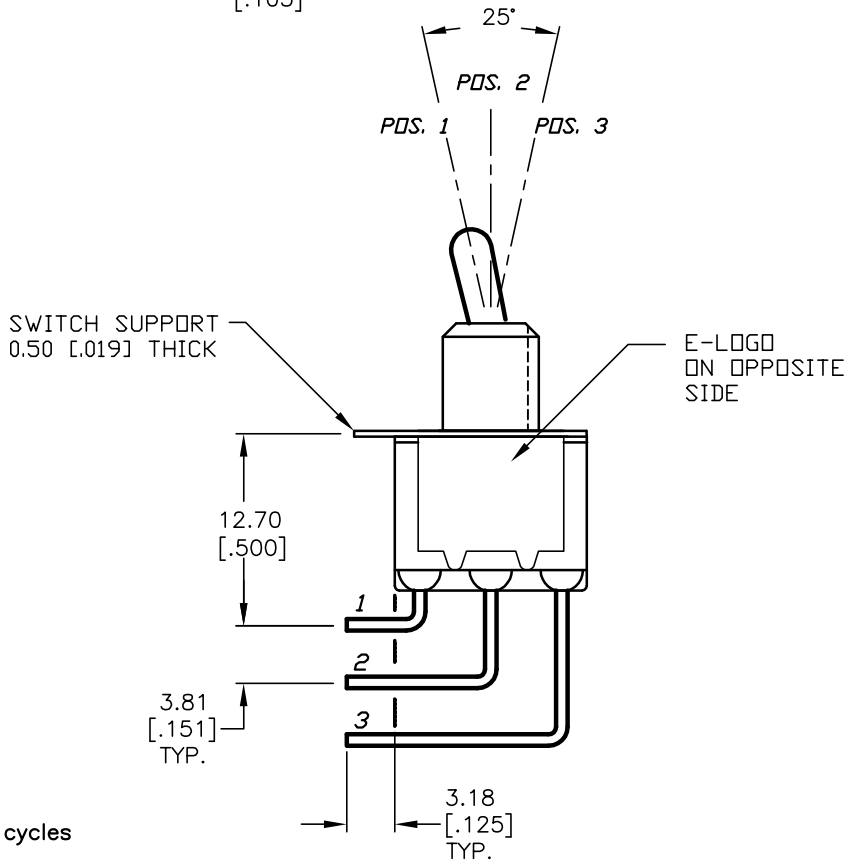

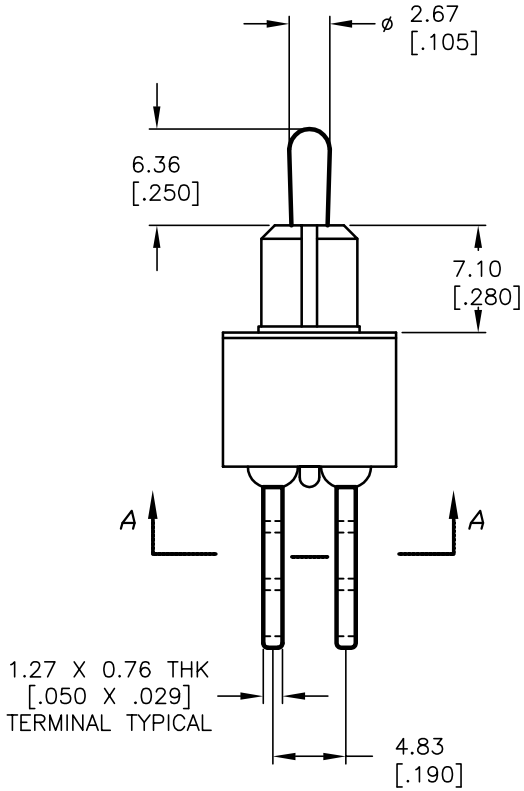

NOTES:

1. ALL DIMENSIONS IN MM [INCH]
2. GENERAL TOLERANCE: X.X=±0.4
   X.XX=±0.25
3. TERM. NOS. FOR REF. ONLY
4. RATING: 5A @120VAC or 28VDC
   2A @250VAC.
5. FIXED TERM. & MOVING CONTACT:
   Copper Alloy W/Silver plate.
6. ELECTRICAL LIFE: 50,000 make–and–break cycles
   at full load.
7. INSULATION RESISTANCE: 1,000M ohm min.
8. DIELECTRIC STRENGTH: 1,000V RMS @sea level.
9. OPERATING TEMP.: –30°C to +85°C.

REV.	ECN No.	DESCRIPTION	DATE	CHKD
A	13638	RELEASED FOR PRODUCTION	12/4/03	AR

THE INFORMATION CONTAINED IN THIS DOCUMENT
IS PROPRIETARY TO E-SWITCH AND IS
NOT TO BE COPIED OR TRANSFERRED

E-SWITCH®

TITLE				
100DP3T2B4M7QE				
SCALE	DATE	DR	DWG	REV
2:1	12/4/03	AR	T123025	A