THIS DRAWING IS UNPUBLISHED. RELEASED FOR PUBLICATION -.- .
© COPYRIGHT - BY TYCO ELECTRONICS CORPORATION. ALL RIGHTS RESERVED.

LOC	DIST
ES	00

REVISIONS

P	LTR	DESCRIPTION	DATE	DWN	APVD
	0	RELEASED ECR-05-001438	04APR05	J.Z	I.E

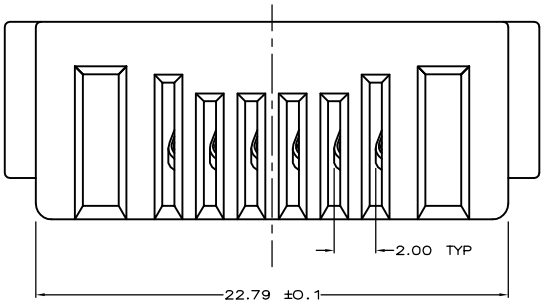

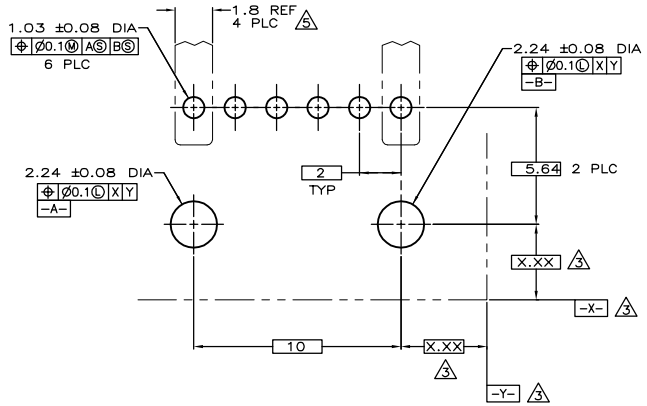

P.C. BOARD MOUNTING DIMENSIONS 4

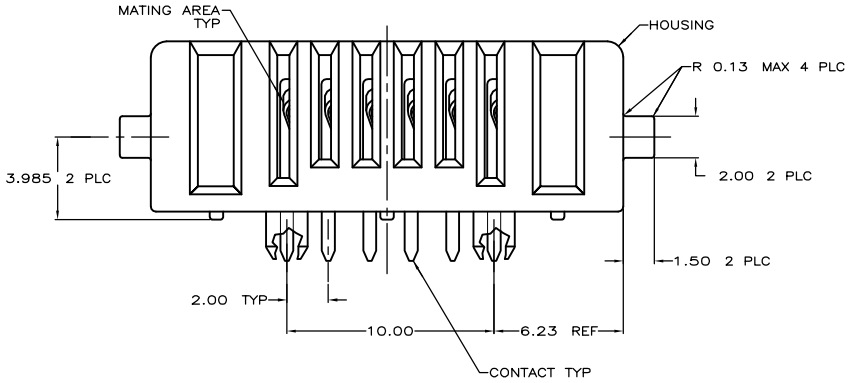

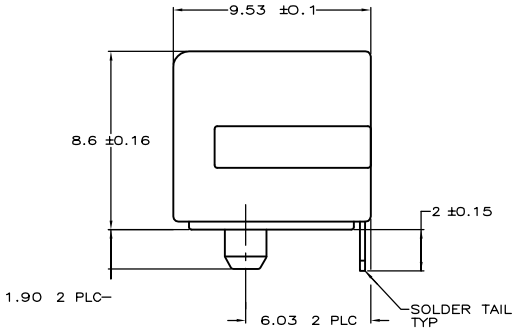

1. MATERIAL:
   HOUSING– SPS, UL 94V–0 RATED, BLACK.
   CONTACTS– PHOSPHOR BRONZE.
2. PLATING:
   CONTACTS: .076um MINIMUM GOLD OVER 0.76μm MINIMUM PALLADIUM NICKEL ON MATING AREA, 3.80um MINIMUM TIN ON SOLDER TAIL, ALL OVER 1.27um MINIMUM NICKEL.
3. DATUMS AND BASIC DIMENSIONS ESTABLISHED BY CUSTOMER.
4. RECOMMENDED PC BOARD THICKNESS OF 1.57.
5. RECOMMENDED MINIMUM TRACE WIDTH FOR END POSITIONS WHEN CARRING 4 AMPS: 1.80 WIDE x 55um THICK, BOTH SIDES.

5787526–1
PART NUMBER

THIS DRAWING IS A CONTROLLED DOCUMENT.

DIMENSIONS: mm

TOLERANCES UNLESS OTHERWISE SPECIFIED:
0 PLC ± –
1 PLC ± –
2 PLC ± 0.13
3 PLC ± 0.13
4 PLC ± –
ANGLES ± –

MATERIAL 1
FINISH 2

DWN M.E.SHIRK 06/16/95
CHK WAYNE DAVIS 06/16/95
APVD R.S.KLINE 07-11-95
PRODUCT SPEC —
APPLICATION SPEC —
WEIGHT —
CUSTOMER DRAWING

Tyco Electronics Corporation
Shanghai PRC

NAME RECEPTACLE ASSEMBLY, 6 POSITION, MDI

SIZE	CAGE CODE	DRAWING NO	RESTRICTED TO
A1	00779	C-5787526	—

SCALE 8:1 SHEET 1 OF 1 REV 0