crydom
www.crydom.com

CSW SERIES

REV. DATE	For Technical Support:
08/12/13	support@crydom.com support-europe@crydom.com

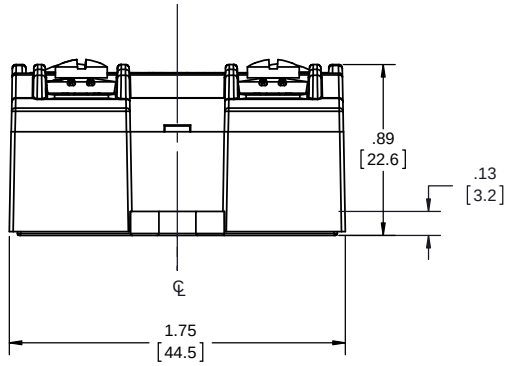

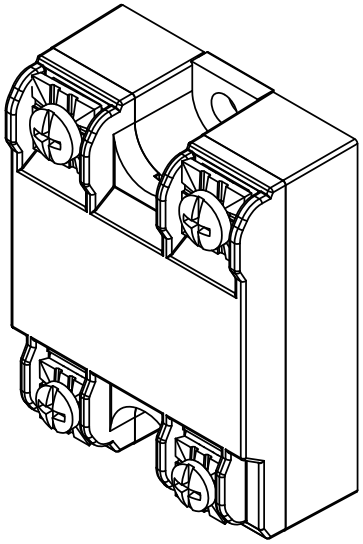

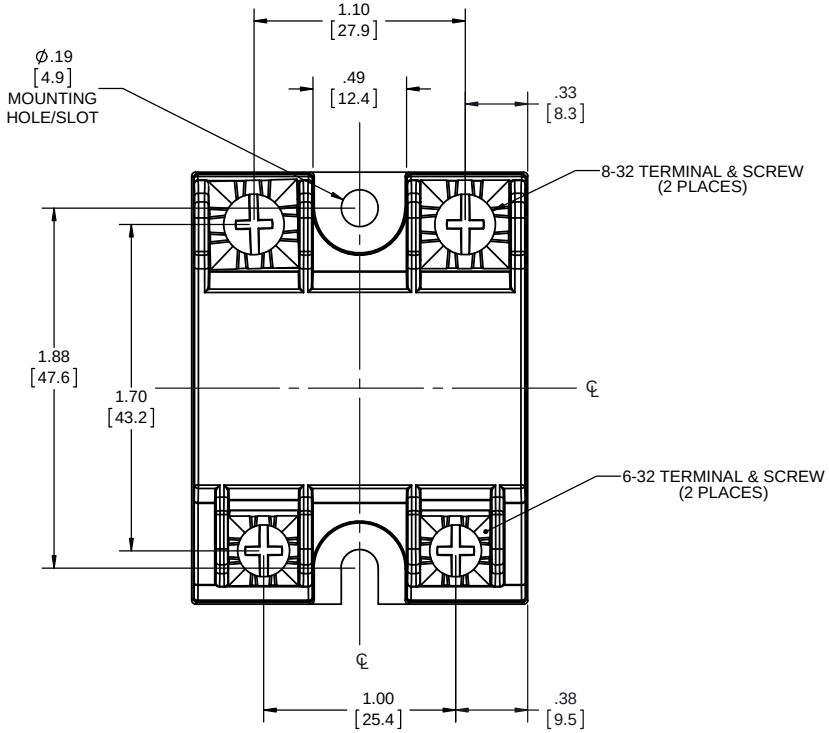

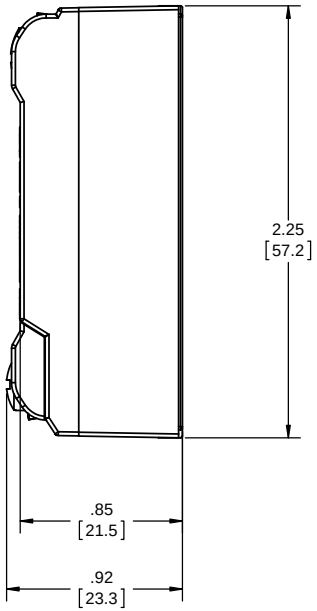

Tolerances: ± 0.02 in / 0.5 mm. All dimensions are in: inches [millimeters]

UNLESS OTHERWISE SPECIFIED, DIMENSIONS ARE IN "in [mm]" INFORMATION IN THIS DRAWING IS PROVIDED FOR REFERENCE ONLY AND IS SUBJECT TO CHANGE.